REQUEST FOR PROPOSALS
("RFP")

FOR

MEDIUM VOLTAGE INTERCONNECTION FROM MIRA PV TO HARTFORD DPW
(RFP Number FY16-EN-001)

PROPOSAL DUE DATE: July 24, 2015

Materials Innovation and Recycling Authority
100 Constitution Plaza, 6th Floor
Hartford, Connecticut 06103-1722

June 29, 2015

REQUEST FOR PROPOSALS

For

MEDIUM VOLTAGE INTERCONNECTION FROM MIRA PV TO HARTFORD DPW

(RFP Number 16-EN-001)

Materials Innovation and Recycling Authority
100 Constitution Plaza, 6th Floor
Hartford, Connecticut 06103-1722

TABLE OF CONTENTS

1. Request for Proposals (including Instructions To Proposers)
2. Notice of Interest Form (for **MANDATORY** pre-proposal conference and site tour)
3. Proposal Bond Form
4. Required Bid/Proposal Forms
   - 4.1. Proposal Form
   - 4.2. Proposal Price Form
   - 4.3. Business Information Form
   - 4.4. References Form
   - 4.5. Questionnaire Concerning Affirmative Action, Small Business Contractors And Occupational Health And Safety
   - 4.6. Affidavit Concerning Nondiscrimination
   - 4.7. Background Questionnaire
   - 4.8. Business Exception Form
5. SEEC Form 11, Notice To Executive Branch State Contractors And Prospective State Contractors Of Campaign Contribution And Solicitation Ban
6. (Form of) Medium Voltage Transmission Line Construction Project
   - Exhibit A: Construction Drawings
   - Exhibit B: General Requirements
   - Exhibit C: Technical Specifications
   - Exhibit D: Project Schedule
   - Exhibit E: Compensation Schedule
   - Exhibit F: Performance Security (Performance Bond/Letter of Credit Forms)
   - Exhibit G: Payment Security (Payment Bond Form)
   - Exhibit H: SEEC Form 11, Notice To Executive Branch State Contractors And Prospective State Contractors Of Campaign Contribution And Solicitation Ban
   - Exhibit I: Affidavit Concerning Nondiscrimination [as submitted in proposal]
   - Exhibit J: Affidavit Concerning Consulting Fees [to be executed by successful proposer]
   - Exhibit K: Contractor's Certification Concerning Gifts [to be executed by successful proposer]
   - Exhibit L: MIRA President's Certification Concerning Gifts

REQUEST FOR PROPOSALS

FOR

MEDIUM VOLTAGE INTERCONNECTION FROM MIRA PV TO HARTFORD DPW

SECTION 1

REQUEST FOR PROPOSALS (INCLUDING INSTRUCTIONS TO SUBMITTERS)

REQUEST FOR PROPOSALS
(INCLUDING INSTRUCTIONS TO PROPOSERS)

MEDIUM VOLTAGE INTERCONNECTION FROM MIRA PV TO HARTFORD DPW

(RFP Number 16-EN-001)

CONTENTS

1. Introduction 1
2. RFP Projected Timeline 2
3. Definitions 3
4. Communications With MIRA Staff and Board Members 4
5. Scope Of Work 4
6. Availability of RFP Package Documents 4
7. Mandatory Pre-Proposal Conference and Site Tour. 5
8. Addenda And Interpretations 5
9. Form Of The Agreement 6
10. Proposal Security 6
11. Proposal Submittal Procedures 7
12. Number Of Copies 7
13. Period Proposals Shall Remain Open 7
14. Modification/Withdrawal Of A Proposal 8
15. Proposal Contents 8
16. MIRA Reserved Rights 9
17. Proposal Opening 9
18. Additional Information And Interviews 10
19. Proposal Evaluation 10
20. Contract Award 11
21. Affidavit Concerning Consulting Fees 11
22. Contractor's Certification Concerning Gifts 12
23. Proposer's Qualifications 12
24. Proposal Preparation And Other Costs 12

1. Introduction

The Materials Innovation and Recycling Authority ("MIRA") is a quasi-public entity, a body politic and corporate, created pursuant to Public Act 14-94 as a successor authority to the Connecticut Resources Recovery Authority ("CRRA") and pursuant to C.G.S. Chapter 446e, Section 22a-261, as a public instrumentality and political subdivision of the State of Connecticut (the "State"). MIRA has the responsibility for the planning, design, construction, financing, management, operation and maintenance of solid waste disposal, volume reduction, resource recovery facilities, and related facilities considered to be necessary, de-

sirable, convenient or appropriate in carrying out the provisions of the state solid waste management plan.

MIRA is seeking proposals from qualified firms to construct a new medium voltage electrical interconnection between MIRA's photovoltaic solar generating facility at the Hartford Landfill located at 180 Leibert Road in Hartford Connecticut (herafter "MIRA PV") and the City of Hartford's DPW Building located at 50 Jennings Road in Hartford Connecticut (hereafter "Hartford DPW").

MIRA is in the process of executing a Power Purchase Agreement and a Long-Term Access Agreement (collectively the "PPA") for MIRA to sell a portion of the electricity generated by the MIRA PV to the City of Hartford. The PPA authorizes MIRA to contract for the Work specified in this RFP and to provide to the successful Proposer access to the Property to complete the work.

2. RFP Projected Timeline

The following is the projected timeline for the RFP process:

ITEM	DATE
RFP Documents Available	Monday, June 29, 2015
Notice of Interest Forms Due (to register for Mandatory pre-proposal conference and site tour)	Must be received prior to Mandatory Pre-Proposal conference and site tour (see below)
Mandatory Pre-Proposal conference and site tour	**Wednesday, July 8, 2015 at 10am**
Deadline for Written Questions	Wednesday, July 15, 2015
Response to Written Questions	Tuesday, July 21, 2015
Proposals Due at MIRA	**10am Friday July 24, 2015**
Expected start date of agreement	The start date will be contingent upon the successful execution of the PPA and approval by MIRA's Board of Director's . Expected to be on or about September 1st, 2015.

MIRA reserves the right at its sole and absolute discretion to extend any of the actual or proposed dates in the above Projected Timeline and further reserves the right to reject any and all Proposals and republish this RFP. MIRA also reserves the right at its sole and absolute discretion to terminate this RFP process at any time prior to the execution of any Agreement.

3. Definitions

As used in this Instructions To Proposers and in other Contract Documents (as defined herein), the following terms shall have the meanings as set forth below:

(a) **Addenda**: Written or graphic documents issued prior to the Proposal due date that clarify, correct or change any or all of the Contract Documents.

(b) **Contract Documents**:

a) Medium Voltage Interconnection From MIRA PV To Hartford DPW Agreement (the "Agreement");
b) RFP Package Documents (defined below);
c) Addenda;
d) The successful Proposer's Proposal (including all documentation attached to or accompanying such Proposal, all other documentation submitted in connection with such Proposal, and all post-submission documentation submitted prior to the issuance of the Notice Of Award);
e) Notice Of Award; and,
f) Any written amendments to the Agreement.

(a) **Laws And Regulations**: Any and all applicable laws, rules, regulations, ordinances, codes, orders and permits of any and all federal, state and local governmental and quasi-governmental bodies, agencies, authorities and courts having jurisdiction.

(b) **Notice Of Award**: Written notification from MIRA to the apparent successful Proposer that states that MIRA has accepted such Proposer's Proposal and sets forth the remaining conditions that must be fulfilled by such Proposer before MIRA executes the Agreement.

(c) **Project**: The new construction of a medium voltage interconnection from the MIRA PV to the Hartford DPW, in accordance with the Contract Documents.

(d) **RFP Package Documents**:

1. Request For Proposals;
2. Notice of Interest Form;
3. Proposal Bond Form;
4. Proposal Forms
   4.1. Proposal Form;
   4.2. Proposal Price Form;
   4.3. Business Information Form;
   4.4. References Form
   4.5. Questionnaire Concerning Affirmative Action, Small Business Contractors And Occupational Health And Safety;
   4.6. Affidavit Concerning Nondiscrimination;

4.7. Background Questionnaire;
4.8. Business Exception Form

5. SEEC Form 11, Notice To Executive Branch State Contractors And Prospective State Contractors Of Campaign Contribution And Solicitation Ban;
6. Agreement for Medium Voltage Interconnection From MIRA PV to Hartford DPW and Exhibits A – L thereto.

Terms used, but not defined, in this Instructions To Proposers shall have the same respective meanings assigned to such terms in the Agreement.

4. Communications With MIRA Staff and Board Members

Except as otherwise authorized by this Instructions To Proposers, during the period while the RFP process is active (i.e., from the date MIRA issues the RFP until the date the successful Proposer accepts the Notice Of Award), firms contemplating or preparing Proposals are prohibited from contacting MIRA staff or MIRA Board of Director members in an ex parte manner to discuss the RFP submission process. A firm's Proposal shall be rejected if any of the foregoing ex parte communications take place.

5. Scope Of Work

MIRA is seeking Proposals from qualified firms to provide a medium voltage interconnection from the Hartford PV to the Hartford DPW, as specified in the (form of) Agreement (Section 6 of the RFP Package Documents)(the "Work").

Specific instructions about how the Work is to be performed are included in the (form of) Agreement (Section 6 of the RFP Package Documents). The Work will be performed in accordance with and as required by the Contract Documents, including but not limited to, The Drawings set forth in **Exhibit A** (the "Construction Drawings"), the Scope of Work set forth in **Exhibit B** (the "General Requirements"), the specifications set forth in **Exhibit C** (the "Specifications") and the schedule set forth in **Exhibit D** (the "Project Schedule") of the Agreement.

6. Availability of RFP Package Documents

Complete sets of the RFP Package Documents may be obtained on the World Wide Web beginning Monday, June 29, 2015 at:

http://www.ctmira.org on the "Current Bids, RFP and RFQ" page, under the "Business Links" section of the website. The RFP documents can be accessed by selecting the the "RFP: Medium Voltage Interconnection from MIRA PV to Hartford DPW" link.

The RFP Package Documents are in PDF format. The forms included in the RFP Package Documents are also available for downloading in Microsoft Word format at the same place on MIRA's web site where the PDF of the RFP is located. Prospective Proposers can fill the forms out by typing the answers on their computer's keyboard. The forms can then be

printed and submitted with the Proposal. MIRA encourages firms to make use of the downloadable Word forms.

The RFP Package Documents are also available Monday through Friday, from 8:30 a.m. to 4:30 p.m. at MIRA's offices, 100 Constitution Plaza, 6th Floor, Hartford, Connecticut 06103-1722, beginning on the same date. Anyone intending to pick up the documents at MIRA's offices must contact Roger Guzowski [(860) 757-7703] at least 24 hours in advance. There is a charge of $75.00 for anyone picking up the documents at MIRA's office. For anyone picking up the RFP Package Documents in accordance with this Section 6, MIRA will NOT print larger-size copies of the Construction Drawings in Exhibit A of the Agreement (Section 6A of the RFP Package Documents). Rather a PDF copy of those drawings will be provided on a compact disk. Payment should be made by check to "Connecticut Resources Recovery Authority."

7. Mandatory Pre-Proposal Conference and Site Tour.

There will be a **mandatory** pre-Proposal conference and site tour starting at the MIRA PV site at the Hartford Landfill, 180 Leibert Road, Hartford CT 06120, on **Wednesday, July 8, 2015 at 10am.** If you are planning to attend this tour, please submit a Notice Of Interest Form (Section 2 of the RFP Package Documents) to MIRA prior to the site tour or deliver the completed form to MIRA at the tour. The Notice Of Interest Form is available on MIRA's web site along with the other RFP documents. Completed Notice Of Interest Forms should be returned to **Roger Guzowski by e-mail (rguzowski@ctmira.org), by fax (860-757-7742), or by correspondence (MIRA, 100 Constitution Plaza, 6th Floor, Hartford, Connecticut 06103-1722).**

8. Addenda And Interpretations

MIRA may issue Addenda to the RFP Package Documents that shall, upon issuance, become part of the RFP Package Documents and binding upon all potential or actual Proposers for the Work. Such Addenda may be issued in response to requests for interpretation or clarification received from potential Proposers. Any request for interpretation or clarification of any documents included in the RFP Package Documents must be **submitted in writing to Roger Guzowski by e-mail (rguzowski@ctmira.org), by fax (860-757-7742), or by correspondence (MIRA, 100 Constitution Plaza, 6th Floor, Hartford, Connecticut 06103-1722). To be given consideration, any such written request must be received by MIRA by 3:00 p.m., Wednesday, July 15, 2015**

Addenda, if any, will be mailed and/or e-mailed to all persons who submitted a Notice Of Interest Form (see Section 8, above) or who picked up or requested from MIRA a printed copy of the RFP Package Documents. Such addenda will also be posted on MIRA's web site http://www.ctmira.org on the "Current Bids, RFP and RFQ" page, under the "Business Links" section of the website. Addenda will be located with the other RFP documents by selecting the the "RFP: Medium Voltage Interconnection from MIRA PV to Hartford DPW" link. Such addenda will be mailed/e-mailed and posted on the web site no later than **Tuesday, July 21, 2015**).

Failure of any Proposer to receive any such Addenda shall not relieve such Proposer from any conditions stipulated in such Addenda. Only questions answered or issues addressed by formal written Addenda will be binding. **All oral and other written responses, statements, interpretations or clarifications shall be without legal effect and shall not be binding upon MIRA.**

9. Form Of The Agreement

The form of the Agreement that MIRA intends to sign with successful Proposer is enclosed as Section 6 of the RFP Package Documents.

While it intends to enter into an agreement with a successful Proposer, MIRA makes no guarantees that any Proposal will result in an Agreement. Further, MIRA reserves the right to reject any or all Proposals and to award any Agreements in a manner deemed to be in its best interests.

The terms and conditions of the Agreement (**Section 6 of the RFP Package Documents**), as attached, are substantially non-negotiable. However, MIRA reserves the right to negotiate, modify, and/or waive at its sole and absolute discretion any terms of the Agreement. Firms requesting a waiver or modification of any of the terms of the Agreement or Scope of Work should submit a Business Exception Form (Section 4.8 of the RFP Package Documents) with their Proposal.

10. Proposal Security

Each Proposal shall be accompanied by a Proposal Security. Any Proposal that does not contain a Proposal Security or any Proposal that contains a Proposal Security that does not comply with the following requirements shall be rejected as non-responsive.

10.1 *Amount of Security*

The Proposal Security shall be in the amount of **Five Percent of the Proposal Price**.

10.2 *Type of Security*

The following are the acceptable forms of Proposal Security:

(a) A cashier's check;

(b) A certified check; or

(c) A Proposal bond in the form included in Section 3 of the RFP Package Documents.

The Proposal Security shall be made payable to MIRA.

Any Proposal bond submitted as Proposal Security shall be in the form provided for such Proposal bond in Section 3 of the RFP Package Documents and such Proposal bond shall be executed and issued by a surety company acceptable to MIRA. Any Proposal that does not contain the above requisite Proposal Security or any Proposal that contains Proposal Security that does not comply with the foregoing requirements shall be rejected as non-responsive.

10.3 *Disposition of Proposal Security*

The Proposal Security of the successful Proposer will be retained until such Proposer has executed the Agreement, furnished the required contract security and satisfied all other conditions of the Notice of Award, including execution and submission of the Contractor's Certification Concerning Gifts, whereupon such Proposal Security will be returned.

If the successful Proposer fails to execute and deliver the Agreement, furnish the required contract security, or satisfy all other conditions of the Notice Of Award within ten (10) days after the issuance of such Notice Of Award, MIRA may annul the Notice Of Award and the Proposal Security of that Proposer shall be forfeited.

The Proposal Security of other Proposers whom MIRA believes to have a reasonable chance of receiving the award may be retained by MIRA until the earlier of the seventh (7th) day after the Effective Date of the Agreement or ninety (90) days after the Proposal due date, whereupon the Proposal Security furnished by such Proposers will be returned. Proposal Security with Proposals that are not competitive will be returned within seven (7) days after the opening of such Proposals.

11. Proposal Submittal Procedures

Sealed Proposals shall be submitted no later than 10:00 a.m., Eastern Time, Friday, July 24, 2015, at the offices of MIRA, 100 Constitution Plaza, 6th Floor, Hartford, Connecticut 06103-1722, Attn: Roger Guzowski. Proposals received after the time and date set forth above shall be rejected.

12. Number Of Copies

Each Proposer must submit one (1) original and two (2) copies of its Proposal. The original Proposal shall be stamped or otherwise marked as such.

Each Proposal (the original and three copies) shall be enclosed in a sealed envelope that shall be clearly marked "Proposal For Medium Voltage Interconnection From MIRA PV to Hartford DPW."

13. Period Proposals Shall Remain Open

Proposals shall remain open and subject to acceptance for ninety (90) days after the Proposal due date.

14. Modification/Withdrawal Of A Proposal

Proposals may be modified or withdrawn by an appropriate document duly executed (in the manner that a Proposal must be executed) and delivered to MIRA's office at any time prior to the Proposal due date.

15. Proposal Contents

Proposals shall be submitted on forms provided by MIRA as part of this Proposal package, all of which forms must be completed with the appropriate information required and all blanks on such forms filled in.

A Proposal must consist of the following and be in the following order:

(a) Title page, including the title of the solicitation, the name of the Proposer and the date the Proposal is submitted;

(b) Cover letter, signed by a person authorized to commit the Proposer to the contractual arrangements with MIRA, which includes the following:

1. The name of the Proposer;
2. A clear statement indicating that the attached Proposal constitutes a firm and binding offer by the Proposer to MIRA considering the terms and conditions outlined in the RFP; and
3. The Proposer's promise, if any, to set aside a portion of the contract for legitimate minority business enterprises (see Section 19.2 of this Instructions To Proposers);

(c) Table of Contents for the Proposer's Proposal;

(d) Proposal Security (cashier's check, certified check or Proposal bond) (see Section 10 of this Request for Proposals);

(e) The completed Proposal Form (Section 4.1 of the RFP Package Documents), with Addenda, if any, listed in the appropriate place (Page 2), the name and address of the contact for Notices listed in the appropriate place (Page 7) and the completed agreement section (Page 7);

(f) The completed Pricing Form (Section 4.2 of the RFP Package Documents);

(g) The completed Business Information Form (Section 4.3 of the RFP Package Documents);

(h) The completed References Form (Section 4.4 of the RFP Package Documents)

(i) The completed Questionnaire Concerning Affirmative Action, Small Business Contractors And Occupational Health And Safety form (Section 4.5 of the RFP

Package Documents), with the Proposer's most recent EEO-1 data attached if the Proposer wishes such data to be considered in the evaluation of its Proposal;

(j) The completed Affidavit Concerning Nondiscrimination (Section 4.6 of the RFP Package Documents) (subscribed and sworn before a Notary Public or Commissioner of the Superior Court);

(k) The completed Background Questionnaire (Section 4.7 of the RFP Package Documents) (subscribed and sworn before a Notary Public or Commissioner of the Superior Court);

(l) The completed Business Exception Form (Section 4.8 of the RFP Package Documents)

(m) A copy of the Proposal submitter's up-to-date certificate of insurance showing all current insurance coverage.

Proposers should not include in their Proposals any other portions of the RFP Package Documents (e.g., this Instructions To Proposers or the Agreement).

Proposer may include additional information as an addendum/appendix to its Proposal if the Proposer thinks that it will assist MIRA in evaluating the Proposer's Proposal. A Proposer should not include information that is not directly related to the subject matter of this solicitation.

16. MIRA Reserved Rights

In addition to the other rights in this Request for Proposals, MIRA reserves, holds and may exercise at its sole discretion, the following rights and options:

(a) To supplement, amend, or otherwise modify or cancel this Request for Proposals with or without substitution of another Request for Proposals;
(b) To issue additional or subsequent solicitations for proposals;
(c) To conduct investigations of the proposers and their proposals;
(d) To clarify the information provided pursuant to this Request for Proposals;
(e) To request additional evidence or documentation to support the information included in any proposal;
(f) To enter into contract discussion with one or more entities having submitted a proposal; and
(g) To reject any and all proposals, or parts thereof, and/or to waive any informality or informalities in any of the proposals or the proposal process for the RFP, if such rejection or waiver is deemed in the best interests of MIRA.

17. Proposal Opening

All Proposals will be opened at MIRA's convenience on or after the Proposal due date.

MIRA reserves the right to reject any or all of the Proposals, or any part(s) thereof, and/or to waive any informality or informalities in any Proposal or the RFP process for this Project.

18. Additional Information And Interviews

MIRA reserves the right to request additional information from Proposal submitters and to request certain submitters to make oral presentations or further explanations of their Proposal.

19. Proposal Evaluation

The award of the contract for the Work will be made, if at all, to the Proposer(s) whose evaluation by MIRA results in MIRA determining that such award to such Proposer(s) is in the best interests of MIRA. **However, the selection of a Proposer(s) and the award of such contract, while anticipated, are not guaranteed**.

MIRA is an Equal Opportunity and Affirmative Action employer and does not discriminate in its hiring, employment, contracting, or business practices. MIRA is committed to complying with the Americans with Disability Act of 1990 (ADA) and does not discriminate on the basis of disability in admission to, access to, or operation of its programs, services, or activities.

19.1 *Evaluation Criteria*

MIRA will base its evaluation of Proposals on the following criteria, which are not necessarily presented in order of importance:

(a) Cost;

(b) Proven ability of the Proposer to perform the Work required by the Contract Documents;

(c) The Proposer's proposed Project Schedule (as specified in the Proposer's Proposal Form - Section 4.1 of the RFP Package Documents);

(d) Any other factor or criterion that MIRA, in its sole discretion, deems or may deem relevant or pertinent for such evaluation.

19.2 *Affirmative Action Evaluation Criteria*

All Proposals will also be rated on the Proposer's demonstrated commitment to affirmative action. Sections 46a-68-1 to 46a-68-17 of the *Regulations of Connecticut State Agencies* require MIRA to consider the following factors when awarding a contract that is subject to contract compliance requirements:

(a) The Proposer's success in implementing an affirmative action plan (see Question 4 of the Questionnaire Concerning Affirmative Action, Small Business Contractors And Occupational Health And Safety (Section 4.5 of the RFP Package Documents));

(b) The Proposer's success in developing an apprenticeship program complying with Sections 46a-68-1 to 46a-68-17 of the *Regulations of Connecticut State Agencies*, inclusive (see Question 5 of the Questionnaire Concerning Affirmative Action, Small Business Contractors And Occupational Health And Safety (Section 4.5 of the RFP Package Documents));

(c) The Proposer's promise to develop and implement a successful affirmative action plan (see Question 4B of the Questionnaire Concerning Affirmative Action, Small Business Contractors And Occupational Health And Safety (Section 4.5 of RFP Package Documents));

(d) The Proposer's submission of EEO-1 data indicating that the composition of its work force is at or near parity when compared to the racial and sexual composition of the work force in the relevant labor market area (See Section 15(j) of this Instructions To Proposers); and

(e) The Proposer's promise to set aside a portion of the contract for legitimate minority business enterprises (see Section 14(b) of this Instructions To Property Appraisers).

MIRA will base its evaluation of the Proposals on cost, qualifications, proven ability of Proposer to perform the Work required by the Contract Documents and any other factor or criterion that MIRA, in its sole discretion, deems or may deem relevant or pertinent for such evaluation.

20. Contract Award

If the contract is to be awarded, MIRA will issue to the successful Proposer(s) a Notice Of Award within ninety (90) days after the Proposal due date.

MIRA reserves the right to correct inaccurate awards resulting from MIRA's errors. This may include, in extreme circumstances, revoking a Notice Of Award already made to a Proposer and subsequently awarding the Notice of Award to another Proposer. Such action by MIRA shall not constitute a breach of this RFP by MIRA since the Notice Of Award to the initial Proposer is deemed to be void ab initio and of no effect as if no Agreement ever existed between MIRA and the initial Proposer.

21. Affidavit Concerning Consulting Fees

Pursuant to *Connecticut General Statutes* Section 4a-81, the apparently successful Proposal submitter(s) must submit an affidavit stating that, except as specified in the affidavit,

it has not entered into any contract with a consultant in connection with the RFP whereby any duties of the consultant pursuant to the contract require the consultant to pursue communications concerning the business of MIRA, whether or not direct contract with MIRA was expected or made. The affidavit is enclosed as Exhibit K of the Agreement [Section 6K of the RFP Package Documents]).

22. Contractor's Certification Concerning Gifts

Pursuant to *Connecticut General Statutes* Section 4-252, the apparently successful Proposer(s) must submit a document certifying that it has not given any gifts to certain individuals between the date MIRA started planning the RFP and the date the Agreement is executed. If the apparently successful Proposer does not execute the Certification, it will be disqualified for the Agreement. The dates between which the Proposer may not give gifts and the identities of those to whom it may not give gifts are specified in the Contractor's Certification Concerning Gifts (Exhibit L of the Agreement [Section 6 of the RFP Package Documents]).

23. Proposer's Qualifications

MIRA may make any investigation deemed necessary to determine the ability of any Proposer to perform the Work required. Each Proposer shall furnish MIRA with all such information as may be required for this purpose.

24. Proposal Preparation And Other Costs

Each Proposer shall be solely responsible for all costs and expenses associated with the preparation and/or submission of its Proposal, or incurred in connection with any interviews and negotiations with MIRA, and MIRA shall have no responsibility or liability whatsoever for any such costs and expenses.

REQUEST FOR PROPOSALS

FOR

MEDIUM VOLTAGE INTERCONNECTION FROM MIRA PV TO HARTFORD DPW

SECTION 2

NOTICE OF INTEREST FORM

NOTICE OF INTEREST FORM

Individuals and firms that have an interest in the Materials Innovation and Recycling Authority ("MIRA") solicitation listed below are encouraged to submit this Notice Of Interest Form to MIRA as early as they can. Request For Bids/Proposals/ Qualifications documents and other information released by MIRA related to the solicitation will be directly provided to those firms that have submitted this Form to MIRA.

Solicitation:	**Agreement For Medium Voltage Interconnection From MIRA PV To Hartford DPW**
RFP Number:	**RFP 16-EN-001**
Notice Due Date	**Notice of Interest Forms must be received by MIRA prior to the MANDATORY pre-proposal conference and site tour on July 8, 2015**

Provide the following information about the individual/firm and the contact person for the firm.

Name of Individual/Firm:	
Name of Contact Person:	
Title of Contact Person:	
Mailing Address 1:	
Mailing Address 2:	
City, State, Zip Code	
Telephone Number:	
Fax Number:	
E-Mail Address:	

Submit this form to the MIRA contact listed below via e-mail, fax or correspondence as listed below.

MIRA Contact:	**Roger Guzowski**
E-Mail Address:	**rguzowski@ctmira.org**
Fax Number:	**(860) 757-7742**
Correspondence Address:	**Materials Innovation and Recycling Authority** **100 Constitution Plaza, 6th Floor** **Hartford, CT 06103**

REQUEST FOR PROPOSALS

FOR

MEDIUM VOLTAGE INTERCONNECTION FROM MIRA PV TO HARTFORD DPW

SECTION 3

PROPOSAL BOND FORM

PROPOSAL BOND FORM

Any singular reference to Contractor, Surety, Owner or other party shall be considered plural where applicable. The below addresses are to be used for giving required notice.

PROPOSER (Name and Address):	**SURETY** (Name and Address of Principal Place of Business):

OWNER (Name and Address):

Materials Innovation and Recycling Authority
100 Constitution Plaza, 6th Floor
Hartford, CT 06103-1722

PROPOSAL

DUE DATE:	July 24. 2015
AMOUNT:	5% of Bid Price
PROJECT DESCRIPTION (Including Name and Location):	MEDIUM VOLTAGE INTERCONNECTION FROM MIRA PV TO HARTFORD DPW Materials Innovation and Recycling Authority 100 Constitution Plaza, 6th Floor Hartford, Connecticut 06103

BOND

BOND NUMBER:	
DATE (Not later than Bid/Proposal Due Date):	
PENAL SUM:	DOLLARS ($)

IN WITNESS WHEREOF, Surety and Bidder/Proposer, intending to be legally bound hereby, subject to the terms printed on Page 2 hereof, do each cause this Bid/Proposal Bond to be duly executed on its behalf by its authorized officer, agent, or representative.

BIDDER/PROPOSER		**SURETY**	
	(SEAL)		(SEAL)
Bidder's Name and Corporate Seal		Surety's Name and Corporate Seal	
SIGNATURE:		**SIGNATURE:**	
NAME AND TITLE:		**NAME AND TITLE:**	

TERMS AND CONDITIONS TO BID/PROPOSAL BOND

1. Bidder/Proposer and Surety, jointly and severally, bind themselves, their heirs, executors, administrators, successors and assigns to pay to Owner upon default of Bidder/Proposer any difference between the total amount of Bidder's/Proposer's bid/proposal and the total amount of the bid/proposal of the next lowest, responsible and responsive bidder/proposer as determined by Owner for the Work/Service required by the Contract Documents, provided that:
   1.1 If there is no such next lowest, responsible and responsive bidder/proposer, and Owner does not abandon the Project, then Bidder/Proposer and Surety shall pay to Owner the penal sum set forth on the face of this Bond, and
   1.2 In no event shall Bidder's/Proposer's and Surety's obligation hereunder exceed the penal sum set forth on the face of this Bond.
2. Default of Bidder/Proposer shall occur upon the failure of Bidder/Proposer to deliver within the time required by the Bid/Proposal Documents (or any extension thereof agreed to in writing by Owner) the executed Agreement and related documents required by the Bid/Proposal Documents and any performance and payment bonds required by the Bid/Proposal Documents and Contract Documents.
3. This obligation shall be null and void if:
   3.1 Owner accepts Bidder's/Proposer's bid/proposal and bidder/proposer delivers within the time required by the Bid/Proposal Documents (or any extension thereof agreed to in writing by Owner) the executed Agreement and related documents required by the Bid/Proposal Documents and any performance and payments bonds required by the Bid/Proposal Documents and Contract Documents, or
   3.2 All bids/proposals are rejected by Owner, or
   3.3 Owner fails to issue a notice of award to Bidder/ Proposer within the time specified in the Bid/Proposal Documents (or any extension thereof agreed to in writing by Bidder/Proposer and, if applicable, consented to by Surety when required by paragraph 5 hereof).
4. Payment under this Bond will be due and payable upon default by Bidder/Proposer and within 30 calendar days after receipt by Bidder/Proposer and Surety of written notice of default from Owner, which notice will be given with reasonable promptness, identifying this Bond and the Project and including a statement of the amount due.
5. Surety waives notice of any and all defenses based on or arising out of any time extension to issue notice of award agreed to in writing by Owner and Bidder/Proposer, provided that the total time for issuing notice of award including extensions shall not in the aggregate exceed 120 days from Bid/Proposal Due Date without Surety's written consent.
6. No suit or action shall be commenced under this Bond prior to 30 calendar days after the notice of default required in paragraph 4 above is received by Bidder/Proposer and Surety and in no case later than one year after Bid/Proposal Due Date.
7. Any suit or action under this Bond shall be commenced only in a court of competent jurisdiction located in the state in which the Project is located.
8. Notices required hereunder shall be in writing and sent to Bidder/Proposer and Surety at their respective addresses shown on the face of this Bond. Such notices may be sent by personal delivery, commercial courier or by United States Registered or Certified Mail, return receipt requested, postage pre-paid, and shall be deemed to be effective upon receipt by the party concerned.
9. Surety shall cause to be attached to this Bond a current and effective Power of Attorney evidencing the authority of the officer, agent or representative who executed this Bond on behalf of Surety to execute, seal and deliver such Bond and bind the Surety thereby.
10. This Bond is intended to conform to all applicable statutory requirements. Any applicable requirement of any applicable statute that has been omitted from this Bond shall be deemed to be included herein as if set forth at length. If any provision of this Bond conflicts with any applicable provision of any applicable statute, then the provision of said statute shall govern and the remainder of this Bond that is not in conflict therewith shall continue in full force and effect.

REQUEST FOR PROPOSALS

FOR

MEDIUM VOLTAGE INTERCONNECTION FROM MIRA PV TO HARTFORD DPW

SECTION 4

REQUIRED STATEMENT OF QUALIFICATIONS FORMS

Includes:

Form 1: Proposal Form

Form 2: Proposal Price Form

Form 3: Business Information Form

Form 4: References Form

Form 5: Questionnaire Concerning Affirmative Action, etc.

Form 6: Affidavit Concerning Non-Discrimination

Form 7: Background Questionnaire

Form 8: Business Exception Form

PROPOSAL FORM

RFP NUMBER: **16-EN-001**

CONTRACT FOR: Medium Voltage Interconnection From MIRA PV To Hartford DPW

RFP SUBMITTED TO: Materials Innovation and Recycling Authority
100 Constitution Plaza, 6th Floor
Hartford, Connecticut 06103-1722

1. DEFINITIONS

Unless otherwise defined herein, all terms that are not defined and used in this Proposal Form (a "Proposal") shall have the same respective meanings assigned to such terms in the Contract Documents.

2. TERMS AND CONDITIONS

The undersigned (the "Proposer") accepts and agrees to all terms and conditions of the Request For Proposals, Instructions To Proposers, and any Addenda to any such documents.

This Proposal shall remain open and subject to acceptance for ninety (90) days after the Proposal due date.

At any time after Proposals are opened MIRA may enter contract negotiations with one or more Proposers. If MIRA contacts Proposer to begin contract negotiations, the Proposer agrees to:

- negotiate the contract in good faith;
- provide in a timely manner clarifications or additional information requested by MIRA during negotiations;
- attend meetings with MIRA and its Board, as necessary, to negotiate, obtain approval for and execute the contract; and
- bear all of its costs and expenses for contract negotiations and approval.

The Proposer recognizes that MIRA has no liability to any party until a contract is approved, and only to the extent provided for in such contract.

If MIRA issues a Notice Of Award to Proposer, Proposer shall within ten (10) days after the date thereof:

(a) Execute and deliver to MIRA the required number of counterparts of the non-negotiable Agreement;

(b) Execute and deliver to MIRA the Contractor's Certification Concerning Gifts;

(c) Execute and deliver to MIRA the Affidavit Concerning Consulting Fees

(d) Deliver to MIRA the requisite certificates of insurance;

(e) Execute and deliver to all other Contract Documents attached to the Notice Of Award along with any other documents required by the Contract Documents; and

(f) Satisfy all other conditions of the Notice Of Award.

3. PROPOSER'S REPRESENTATIONS CONCERNING EXAMINATION OF CONTRACT DOCUMENTS

In submitting this Proposal, Proposer represents that:

- Proposer has thoroughly examined and carefully studied the RFP Package Documents and the following Addenda, receipt of which is hereby acknowledged (list Addenda by Addendum number and date):

Addendum Number	Date Issued

- Without exception, the Proposal is premised upon performing, finishing, and completing the Work required by the Contract Documents and applying the specific means, methods, techniques, sequences, or procedures (if any) that may be shown, indicated, or expressly required by the Contract Documents;

- Proposer is fully informed and is satisfied as to all Laws And Regulations that may affect cost, progress, performance, furnishing and/or completion of the Work;

- Proposer has studied and carefully correlated Proposer's knowledge and observations with the Contract Documents and such other related data;

- Proposer has given MIRA written notice of all conflicts, errors, ambiguities and discrepancies that Proposer has discovered in the Contract Documents;

- If Proposer has failed to promptly notify MIRA of all conflicts, errors, ambiguities and discrepancies that Proposer has discovered in the Contract Documents, such failure shall be deemed by both Proposer and MIRA to be a waiver to assert these issues and claims in the future;

- Proposer is aware of the general nature of Work to be performed by MIRA and others that relates to the Work for which this Proposal is submitted; and

- The Contract Documents are generally sufficient to indicate and convey understanding by Proposer of all terms and conditions for performing, furnishing and completing the Work for which this Proposal is submitted

4. PROPOSER'S REPRESENTATIONS CONCERNING SITE CONDITIONS

In submitting this Proposal, Proposer acknowledges and agrees that:

(a) All information and data included in the RFP Package Documents relating to the surface, subsurface and other conditions of the Site (as defined in Section 1.1.8 of the Agreement) are from presently available sources and are being provided only for the information and convenience of the Proposers;

(b) MIRA does not assume any responsibility for the accuracy or completeness of such information and data, if any, shown or indicated in the Contract Documents with respect to any surface, subsurface or other conditions of the Site;

(c) Proposer is solely responsible for investigating and satisfying itself as to all actual and existing Site conditions, including surface conditions, subsurface conditions and underground facilities; and

(d) Proposer has visited the Site and has become familiar with and is satisfied as to the general, local, and site conditions that may affect cost, progress, performance, furnishing and completion of the Work.

5. PROPOSER'S REPRESENTATIONS CONCERNING INFORMATION MADE AVAILABLE

In submitting this Proposal, Proposer acknowledges and agrees that Proposer shall not use any information made available to it or obtained in any examination made by it in connection with this RFP in any manner as a basis or grounds for a claim or demand of any nature against MIRA arising from or by reason of any variance which may exist between information offered or so obtained and the actual conditions encountered during performance of any of the Work.

6. PROPOSER'S REPRESENTATIONS CONCERNING STATE OF CONNECTICUT TAXES

In submitting this Proposal, Proposer acknowledges and agrees that MIRA is exempt from all State of Connecticut taxes and assessments, including sales and use taxes. Accordingly, Proposer shall not charge MIRA any State of Connecticut taxes or assessments at any time in connection with Proposer's performance of this Agreement, nor shall Proposer include any State of Connecticut taxes or assessments in any rates, costs, prices or other charges to MIRA hereunder. Proposer represents and warrants that no State of Connecticut taxes or assessments were included in any rates, costs, prices or other charges presented to MIRA in any Proposal or other submittal to MIRA in connection with this RFP.

7. PROPOSER'S REPRESENTATIONS CONCERNING DISCLOSURE OF INFORMATION

In submitting this Proposal, Proposer:

- Recognizes and agrees that MIRA is subject to the Freedom of Information provisions of the *Connecticut General Statutes* and, as such, any information contained in or submitted with or in connection with it Proposal is subject to disclosure if required by law or otherwise; and

- Expressly waives any claim(s) that Proposer or any of its successors and/or assigns has or may have against MIRA or any of its directors, officers, employees or authorized agents as a result of any such disclosure.

8. PROPOSER'S REPRESENTATIONS CONCERNING NON-COLLUSION

By submission of this Proposal, the Proposer, together with any affiliates or related persons, the guarantor, if any, and any joint ventures, hereby represents that, under risk of termination of the Agreement, if awarded, to the best of its knowledge and belief:

(a) The prices in the Proposal have been arrived at as the result of an independent business judgment without collusion, consultation, communication, agreement or otherwise for the purpose of restricting competition, as to any matter relating to such prices and any other person or company;

(b) Unless otherwise required by law, the prices that have been quoted in this Proposal have not, directly or indirectly, been knowingly disclosed by the Proposer prior to the "Proposal opening" to any other person or company;

(c) No attempt has been made or will be made by the Proposer to induce any other person, partnership of corporation to submit, or not to submit, a Proposal for the purpose of restricting competition;

(d) Proposer has not directly or indirectly induced or solicited any other Proposer to submit a false or sham Proposal; and

(e) Proposer has not sought by collusion to obtain for itself any advantage for the Work over any other Proposer for the Work or over MIRA.

9. PROPOSER'S REPRESENTATIONS CONCERNING RFP FORMS

By submission of this Proposal, the Proposer, together with any affiliates or related business entities or persons, the guarantor, if any, and any joint ventures, hereby represents that, under risk of disqualification from the procurement process all of the forms included in the RFP that are submitted to MIRA as part of its Proposal are identical in form and content to the preprinted forms in the RFP Package Documents except that information requested by the forms has been inserted in the spaces on the forms provided for the insertion of such requested information.

10. PROPOSER'S WAIVER OF DAMAGES

Proposer and all its affiliates and subsidiaries understand that by submitting a Proposal, Proposer is acting at its and their own risk and Proposer does for itself and all its affiliates, subsidiaries, successors and assigns hereby waive any rights any of them may have to receive any damages for any liability, claim, loss or injury resulting from:

- Any action or inaction on the part of MIRA or any of its directors, officers, employees or authorized agents concerning the evaluation, selection, non-selection and/or rejection of any or all Proposals by MIRA or any of its directors, officers, employees or authorized agents;

- Any agreement entered into for the Work (or any part thereof) described in the Contract Documents; and/or

- Any award or non-award of a contract for the Work (or any part thereof) pursuant to the Contract Documents.

11. PROPOSER'S REPRESENTATION REGARDING THE CONNECTICUT CAMPAIGN CONTRIBUTION AND SOLICITATION BAN

With regard to a State contract as defined in P.A. 07-1 having a value in a calendar year of $50,000 or more or a combination or series of such agreement or contracts having a value of $100,000 or more, the authorized signatory to this submission in response to MIRA's solicitation expressly acknowledges receipt of the State Elections Enforcement Commission's notice advising prospective state contractors of state campaign contribution and solicitation prohibitions, and will inform its principals of the contents of the notice. See Section 5 [SEEC Form 11] of the RFP Package Documents.

12. ATTACHMENTS

The following documents are attached hereto and made a part of this Proposal, each completely filled out by the Proposer, and, where called for by the respective form, signed before a Notary Public or Commissioner of the Superior Court:

- Proposal Form 1 - This Proposal Form, completed in its entirety and signed by the Proposer;
- Proposal Form 2 – Proposal Price Form;
- Proposal Form 3 – Business Information Form;
- Proposal Form 4 – References Form
- Proposal Form 5 – Questionnaire Concerning Affirmative Action;
- Proposal Form 6 - Affidavit Concerning Nondiscrimination; Small Business Contractors And Occupational Health And Safety;
- Proposal Form 7 – Background Questionnaire;
- Proposal Form 8 – Business Exception Form;
- The Proposer's Proposal Security

13. PROPOSER'S PROJECT SCHEDULE

In the spaces below, Proposer shall provide its proposed project schedule. If proposer is awarded a contract, the following project schedule shall be used to determine the Completion Date of the project by replacing the Proposed Project Start Date with the actual Project Start Date defined by MIRA in the Notice to Proceed and adding to it the Number of Days Required to Complete Project provided below by Proposer.

Proposed Project Start Date (May be modified by MIRA based on actual schedule of Proposal review and award):	
Proposed number of days for procurement and delivery of all materials and equipment:	
Proposed number of days for construction of overhead transmission facilities:	
Proposed number of days for construction of underground transmission facilities:	
Proposed number of days from Start Date to complete project (Solar PV providing power to Hartford DPW directly through new facilities):	

14. NOTICES

Communications concerning this Proposal should be addressed to Proposer at the address set forth below.

Proposer Name:	
Proposer Contact:	
Title:	
Street Address 1:	
Street Address 2:	
City, State, Zip Code	
Telephone Number:	
Fax Number:	
E-Mail Address:	

15. ADDITIONAL REPRESENTATION

Proposer hereby represents that the undersigned is duly authorized to submit this Proposal on behalf of Proposer.

AGREED TO AND SUBMITTED ON _____, 20 __

Name of Proposer (Firm):	
Signature of Proposer Representative:	
Name (Typed/Printed):	
Title (Typed/Printed):	

PROPOSAL PRICE FORM
MEDIUM VOLTAGE INTERCONNECTION FROM MIRA PV TO HARTFORD DPW

Furnish and install as specified in the Plans and Specifications for Medium Voltage Interconnection from MIRA PV to Hartford DPW Building.

Base proposal shall include all work associated with providing overhead/underground transmission lines from MIRA PV system to the Hartford DPW building and site work with all required infrastructure as indicated on the drawings and in the specifications.

Base Proposal Amount…….$_____

Allowance #1 (Eversource installation of REC meter)……$ 14,000

Allowance #2 (Transport & Dispose of 40 tons excavated materials and pavement)$ 4,000

Total Base Proposal including Base Proposal and Allowances #1&#2…….$_____

Written Base Proposal Amount $_____

Alternate # 1 (Indicate add (+) or deduct (-) for cross arms
Instead of Tri-plex overhead from pole # 3A to 3K)……$_____ _____

Alternate # 2(Tree clearing)…….$_____

For accounting purposing only please indicate the amount included in the base proposal for the procurement and installation of the following:

Medium Voltage 500 kva Transformer & Lightning Arrestors……..$_____

Proposer affirms that the above costs represent the entire cost to complete the Work in accordance with the Contract Documents, and that no claim will be made on account of any increase in wage scales, material prices, delivery delays, taxes, insurance, cost indexes or any other rates affecting the construction industry or this Project, and that each and every such claim is hereby expressly waived by Proposer

Name of Proposer (Firm):	
Signature of Proposer Representative:	
Name (Type/Print):	
Title:	
Date:	

BUSINESS INFORMATION FORM

Bidder/Proposer/Statement of Qualifications Submitter (hereinafter collectively referred to as "Contractor" must provide the information requested in the following sections.

1. CONTRACTOR INFORMATION

Name of Entity:		
Central Office/ Headquarters Address:	Address 1:	
	Address 2:	
	City, State, Zip Code:	
Servicing Office Address (if different than Central Office/ Headquarters Address):	Address 1:	
	Address 2:	
	City, State, Zip Code:	
Name of Parent Company (if any):		
Entity's Legal Structure:	☐ Corporation ☐ Joint Venture ☐ Partnership ☐ Public Entity ☐ Other	
State in Which Entity is Legally Organized:		
Year Entity Started:		Number of Employees:		Number of Offices:	
Location(s) of Offices (City and State):		

2. CONTRACTOR BACKGROUND AND EXPERIENCE

In the box below or in a separate format attached hereto this business information form, please provide information regarding the Contractor's principle lines of work and summarize work performed or services provided by the Contractor that are of a similar nature to those specified in the Contract documents which will enable MIRA to evaluate the experience and professional capabilities of the Contractor (not to exceed 2 pages).

3. SUBCONTRACTOR INFORMATION

	Yes	No
Will bidder Contractor **subcontract** with entities for significant portions of the Services?	☐	☐

If Contractor answered "yes" to the above question, provide the following information concerning the subcontractors. If Contractor will subcontract with more than two entities, copy this page of the Form and provide the requested information on the additional subcontractors.

	Subcontractor 1
Name of Entity:	
Street Address 1:	
Street Address 2:	
City, State, Zip Code:	
Telephone Number:	
Provide brief description of specific role Subcontractor 1 will have in providing the Work/Services.	

	Subcontractor 2
Name of Entity:	
Street Address 1:	
Street Address 2:	
City, State, Zip Code:	
Telephone Number:	
Provide brief description of specific role Subcontractor 2 will have in providing the Work/Services.	

REFERENCES FORM

In space below, provide the names of three (3) non-MIRA references who can attest to the quality of work performed/services provided by Bidder/Proposer/Statement of Qualifications Submitter. Include job title, the name, address and phone number of the business and a brief description of the work performed/services provided for each reference.

REFERENCE 1

Name of Person:	
Title:	
Name of Business:	
Address:	
Telephone Number:	
Brief Description Of Work Performed/ Services Provided:	

REFERENCE 2

Name of Person:	
Title:	
Name of Business:	
Address:	
Telephone Number:	
Brief Description Of Work Performed/ Services Provided:	

REFERENCE 3

Name of Person:	
Title:	
Name of Business:	
Address:	
Telephone Number:	
Brief Description Of Work Performed/ Services Provided:	

QUESTIONNAIRE CONCERNING AFFIRMATIVE ACTION, SMALL BUSINESS CONTRACTORS AND OCCUPATIONAL HEALTH AND SAFETY

Because MIRA is a political subdivision of the State of Connecticut, it is required by various statutes and regulations to obtain background information on prospective contractors prior to entering into a contract. The questions below are designed to assist MIRA in procuring this information. Many of the questions are required to be asked by RCSA 46a-68j-31. For the purposes of this form, "Contractor" means Bidder, Proposer or Statement of Qualifications Submitter, as appropriate.

	Yes	No
1. Is the Contractor an Individual? *If you answered "Yes" to Question 1, skip to Question 2.* *If you answered "No" to Question 1, proceed to Question 1A and then to Question 2.*	☐	☐
1A. How many employees does the Contractor have? ☐		
2. Is the Contractor a Small Business Enterprise based on the criteria in Schedule A? *If you answered "Yes" to Question 2, proceed to Question 2A and then to Question 3.* *If you answered "No" to Question 2, skip to Question 3.*	☐	☐
2A. Is the Contractor certified by DAS as a Small Business Enterprise?[1]	☐	☐
3. Is the Contractor a Minority Owned Business Enterprise based on the criteria in Schedule B? *If you answered "Yes" to Question 3, proceed to Question 3A and then to Question 4.* *If you answered "No" to Question 3, skip to Question 4.*	☐	☐
3A. Is the Contractor certified by DAS as a Minority Owned Business Enterprise?[1]	☐	☐
4. Does the Contractor have an Affirmative Action Plan?[2] *If you answered "Yes" to Question 4, proceed to Question 4A and then to Question 5.* *If you answered "No" to Question 4, skip to Question 4B and then to Question 5.*	☐	☐
4A. Has the Affirmative Action Plan been approved by the CHRO?	☐	☐
4B. Will the Contractor develop and implement an Affirmative Action Plan?	☐	☐
5. Does the Contractor have an apprenticeship program complying with RCSA 46a-68-1 through 46a-68-17?	☐	☐
6. Has the Contractor been cited for three or more willful or serious violations of any occupational safety and health act?	☐	☐
7. Has the Contractor received one or more criminal convictions related to the injury or death of any employee in the three-year period preceding the issuance of this Request For Bids/Proposals/Qualifications?	☐	☐
8. Has the Contractor been the recipient of one or more ethical violations from the State of Connecticut Ethics Commission during the three-year period preceding the issuance of this Request For Bids/Proposals/Qualifications?	☐	☐
9. Will subcontractors be involved? *If you answered "Yes" to Question 9, proceed to Question 9A.* *If you answered "No" to Question 9, you are finished with the questionnaire.*	☐	☐
9A. How many subcontractors will be involved? ☐		

LIST OF ACRONYMS

RCSA – Regulations of Connecticut State Agencies
CHRO – State of Connecticut Commission on Human Rights and Opportunities
DAS – State of Connecticut Department of Administrative Services

FOOTNOTES

[1] If the Contractor answered “yes” to Question 2A and/or 3A, Contractor must attach a copy of its DAS Set-Aside Certificate to this Questionnaire.

[2] If the Contract is a "public works contract" (as defined in Section 46a-68b of the Connecticut General Statutes), the dollar amount exceeds Fifty Thousand Dollars ($50,000.00) in any fiscal year, and the Contractor has fifty (50) or more employees, the Contractor, in accordance with the provisions of Section 46a-68c of the Connecticut General Statutes, shall develop and file an affirmative action plan with the Connecticut Commission on Human Rights and Opportunities.

SCHEDULE A
CRITERIA FOR A SMALL BUSINESS ENTERPRISE (SBE)

Contractor, including a non-profit corporation, must meet all of the following criteria to qualify as a Small Business Enterprise:

1. Maintains its principal place of business in Connecticut. ;
2. Has had gross revenues not exceeding fifteen million dollars ($15,000,000) during its most recent fiscal year (Contractor shall not be considered a Small Business Enterprise if it is affiliated with another person if both persons considered together have a gross revenue exceeding fifteen million dollars); and
3. Is independent, such that the viability of the Contractor does not depend on another person or company, as determined by an analysis of the Contractor’s relationship with any other person or company in regards to the provision of personnel, facilities, equipment, other resources, and financial support, including bonding.

SCHEDULE B
CRITERIA FOR A MINORITY OWNED BUSINESS ENTERPRISE (MBE)

Contractor must meet all of the following criteria to qualify as a Minority Owned Business Enterprise:

1. Satisfies all of the criteria in Schedule A for a Small Business Enterprise;
2. At least 51% of the capital stock, if any, or assets are owned by a person or persons who:
    i. Exercise operational authority over the daily affairs of the enterprise;
    ii. Have the power to direct the management and policies and receive the beneficial interest of the enterprise;
    iii. Possess managerial and technical competence and experience directly related to the principal activities of the enterprise; and
    iv. Are members of a minority as defined in section 32-9n of the Connecticut General Statutes, or are individuals with a disability.

CONNECTICUT GENERAL STATUTES SECTION 46a-68b

As used in this section and sections 4a-60, 4a-60a, 4a-60g, 4a-62, 46a-56 and 46a-68c to 46a-68k, inclusive: "Public works contract" means any agreement between any individual, firm or corporation and the state or any political subdivision of the state other than a municipality for construction, rehabilitation, conversion, extension, demolition or repair of a public building, highway or other changes or improvements in real property, or which is financed in whole or in part by the state, including, but not limited to, matching expenditures, grants, loans, insurance or guarantees.

AFFIDAVIT CONCERNING NONDISCRIMINATION

This Affidavit must be completed and properly executed under penalty of false statement by a chief executive officer, president, chairperson, member or other corporate officer duly authorized to adopt company, corporate or partnership policy of the business entity submitting a bid/proposal/statement of qualifications to the Materials Innovation and Recycling Authority that certifies such business entity complies with the nondiscrimination agreement and warranties contained in Connecticut General Statutes §§ 4a-60(a)(1) and 4a-60a(a)(1), as amended, regarding nondiscrimination against persons on account of their race, color, religious creed, age, marital status, national origin, ancestry, sex, gender identity or expression, intellectual disability, mental disability, physical disability or sexual orientation.

I, the undersigned, am over the age of eighteen and understand and appreciate the obligation of an oath. I am _____ (title) of _____ (firm name), an entity duly formed and existing under the laws of _____ (name of state or commonwealth) ("Contractor").

I certify that I am authorized to execute and deliver this affidavit on behalf of Contractor, as follows:

1. Contractor seeks to enter into the "AGREEMENT FOR MEDIUM VOLTAGE INTERCONNECTION FROM MIRA PV TO HARTFORD DPW (the "Agreement") with the Materials Innovation and Recycling Authority; and

2. Contractor has in place a company or corporate policy that complies with the nondiscrimination agreements and warranties required under Connecticut General Statutes §§ 4a-60(a)(1) and 4a-60a(a)(1), as amended, and the said company or corporate policy is in effect as of the date hereof.

By (Signature): _____

Name (Print): _____

Title: _____

Sworn to before me this _____ day of _____ 20 ____

_____ _____

Notary Public/Commissioner of the Superior Court Commission Expiration Date

Sections 4a-60(a)(1) and 4a-60a(a)(1) of the Connecticut General Statutes follow.

Sec. 4a-60. (Formerly Sec. 4-114a). Nondiscrimination and affirmative action provisions in contracts of the state and political subdivisions other than municipalities.

(a) Every contract to which the state or any political subdivision of the state other than a municipality is a party shall contain the following provisions:

(1) The contractor agrees and warrants that in the performance of the contract such contractor will not discriminate or permit discrimination against any person or group of persons on the grounds of race, color, religious creed, age, marital status, national origin, ancestry, sex, gender identity or expression, intellectual disability, mental disability or physical disability, including, but not limited to, blindness, unless it is shown by such contractor that such disability prevents performance of the work involved, in any manner prohibited by the laws of the United States or of the state of Connecticut; and the contractor further agrees to take affirmative action to insure that applicants with job-related qualifications are employed and that employees are treated when employed without regard to their race, color, religious creed, age, marital status, national origin, ancestry, sex, gender identity or expression, intellectual disability, mental disability or physical disability, including, but not limited to, blindness, unless it is shown by such contractor that such disability prevents performance of the work involved;

Sec. 4a-60a. Contracts of the state and political subdivisions, other than municipalities, to contain provisions re nondiscrimination on the basis of sexual orientation.

(a) Every contract to which the state or any political subdivision of the state other than a municipality is a party shall contain the following provisions:

(1) The contractor agrees and warrants that in the performance of the contract such contractor will not discriminate or permit discrimination against any person or group of persons on the grounds of sexual orientation, in any manner prohibited by the laws of the United States or of the state of Connecticut, and that employees are treated when employed without regard to their sexual orientation;

Materials Innovation and Recycling Authority

BACKGROUND QUESTIONNAIRE

This Questionnaire must be completed and properly executed by an individual or business entity submitting a bid/proposal/statement of qualifications to the Materials Innovation and Recycling Authority (such individual or business entity hereinafter referred to as the "Contractor").

Please answer the following questions by placing an "X" in the appropriate box.

	Yes	No
1. Has the Contractor or any of the following ever been the subject of a **criminal** investigation? (a) A principal of the Contractor; (b) An owner of the Contractor; (c) An officer of the Contractor; (d) A partner in the Contractor; (e) A director of the Contractor; or (f) A stockholder of the Contractor holding 50% or more of the stock of the Contractor. *If you answered "Yes" to Question 1, proceed to Question 1A and, on a separate sheet of paper, state the following: the court in which the investigation is taking or took place; the approximate date the investigation commenced and, if applicable, concluded; the subject matter of the investigation; and the identity of the person or entity involved.* *If you answered "No" to Question 1, proceed to Question 2.*	☐	☐
1A. Has any indictment arisen out of any such investigation? *If you answered "Yes" to Question 1A, proceed to Question 1B and, on a separate sheet of paper, state the following: the name of the person or entity indicted; and the status of any such indictment.* *If you answered "No" to Question 1A, proceed to Question 2.*	☐	☐
1B. Has any conviction arisen out of any such indictment? *If you answered "Yes" to Question 1B, proceed to Question 2 and, on a separate sheet of paper, state the following: the name of the person or entity convicted, the sentence imposed and whether or not an appeal of the conviction is pending.* *If you answered "No" to Question 1B, proceed to Question 2.*	☐	☐

2. Has the Contractor or any of the following ever been the subject of a **civil** investigation[1]? (a) A principal of the Contractor; (b) An owner of the Contractor; (c) An officer of the Contractor; (d) A partner in the Contractor; (e) A director of the Contractor; or (f) A stockholder of the Contractor holding 50% or more of the stock of the Contractor. *If you answered "Yes" to Question 2, proceed to Question 3 and, on a separate sheet of paper, state the following: the court or other forum in which the investigation took or is taking place; the approximate date the investigation commenced and, if applicable, concluded; the subject matter of the investigation; the identity of the person or entity involved; the status of the investigation; and the outcome of the investigation.* *If you answered "No" to Question 2, proceed to Question 3.*	☐	☐
3. Has any entity (e.g., corporation, partnership, etc.) in which any of the following has an ownership interest of 50% or more in such entity ever been the subject of a **criminal** investigation? (a) A principal of the Contractor; (b) An owner of the Contractor; (c) An officer of the Contractor; (d) A partner in the Contractor; (e) A director of the Contractor; or (f) A stockholder of the Contractor. *If you answered "Yes" to Question 3, proceed to Question 3A and, on a separate sheet of paper, state the following: the court in which the investigation is taking or took place; the approximate date the investigation commenced and, if applicable, concluded; the subject matter of the investigation; and the identity of the person or entity involved.* *If you answered "No" to Question 3, proceed to Question 4.*	☐	☐
3A. Has any indictment arisen out of any such investigation? *If you answered "Yes" to Question 3A, proceed to Question 3B and, on a separate sheet of paper, state the following: the name of the person or entity indicted; and the status of any such indictment.* *If you answered "No" to question 3A, proceed to Question 4.*	☐	☐
3B. Has any conviction arisen out of any such indictment? *If you answered "Yes" to Question 3B, proceed to Question 4 and, on a separate sheet of paper, state the following: the name of the person or entity convicted, the sentence imposed and whether or not an appeal of the conviction is pending.* *If you answered "No" to Question 3B, proceed to Question 4.*	☐	☐

[1] The phrase "civil investigation" means an investigation undertaken by a governmental entity (e.g., federal, state or municipal) that has investigative and enforcement authority (e.g., the Office of the Connecticut Attorney General, the Connecticut Ethics Commission, the Connecticut Elections Enforcement Commission, the federal Securities and Exchange Commission).

4. Has any entity (e.g., corporation, partnership, etc.) in which any of the following has an ownership interest of 50% or more in such entity ever been the subject of a **civil** investigation[1]? (a) A principal of the Contractor; (b) An owner of the Contractor; (c) An officer of the Contractor; (d) A partner in the Contractor; (e) A director of the Contractor; or (f) A stockholder of the Contractor. *If you answered "Yes" to Question 4, proceed to Question 5 and, on a separate sheet of paper state the following: the court in which the investigation is taking or took place; the approximate date the investigation commenced and, if applicable, concluded; the subject matter of the investigation; the identity of the person or entity involved; the status of the investigation; and the outcome of the investigation..* *If you answered "No" to question 4, proceed to Question 5.*	☐	☐
5. Has the Contractor or any of the following ever been debarred from bidding on, or otherwise applying for, any contract with the State of Connecticut or any other governmental authority? (a) A principal of the Contractor; (b) An owner of the Contractor; (c) An officer of the Contractor; (d) A partner in the Contractor; (e) A director of the Contractor; or (f) A stockholder of the Contractor holding 50% or more of the stock of the Contractor. *If you answered "Yes" to Question 5, proceed to the Certification on the following page and, on a separate sheet of paper please explain.* *If you answered "No" to question 5, proceed to the Certification on the following page.*	☐	☐

CERTIFICATION

Signature: _____

Name (print/type): _____

Title: _____

State Of: _____

County Of: _____

_____, being fully sworn, deposes and says that he/she is the _____ (Title) of _____ (Firm Name), the Contractor herein, that he/she has provided answers to the foregoing questions on the Contractor's background, and, under the penalty of perjury, certifies that each and every answer is true.

Sworn to before me this _____ day of _____ 20 ___

_____

Notary Public/Commissioner of the Superior Court

BUSINESS EXCEPTION FORM

Using this form (add additional sheets of paper as needed), Proposer (hereinafter collectively referred to as "Contractor") shall identify any portion of the Work required or described in the RFP Package Documents, or any provision of the Agreement that Contractor desires to take exception to, including insurance, if any.

Contractor shall be specific regarding any exceptions listed. Contractor shall describe in detail the portion(s) of the Work or Agreement terms that the Contractor is taking exception to and why. Contractor shall also describe what, if any, alternative services, terms, or conditions Contractor is willing to provide or accept as a substitution for the Service, terms, or conditions to which Contractor has taken exception, if any.

If Contractor does not take exception to any portion of the Work required or described in this RFP Package Documents or to any terms of the Agreement, Contractor shall simply indicate below that Contractor "takes no exceptions", and submit this form along with the other Proposal forms as part of its Proposal submittal.

Note that MIRA will negotiate with Contractor on only those items identified by Contractor on this Business Exception Form. Also note that revisions to the services or Agreement will be at MIRA's sole discretion. Also note that pursuant to State of Connecticut statutes and regulations, the Agreement contains a number of provisions that MIRA, as a quasi-public entity, is required to incorporate in all of its contracts and are, therefore, non-negotiable.

Description of Exception Item		Reason for Exception	Proposed Alternative
1.			
2.			

Description of Exception Item		Reason for Exception	Proposed Alternative
3.			
4.			
5.			
6.			
7.			

REQUEST FOR PROPOSALS

FOR

MEDIUM VOLTAGE INTERCONNECTION
FROM MIRA PV TO HARTFORD DPW

SECTION 5

SEEC FORM 11
NOTICE TO EXECUTIVE BRANCH STATE CONTRACTORS AND PROSPECTIVE STATE CONTRACTORS OF CAMPAIGN CONTRIBUTION AND SOLICITATION BAN

SEEC FORM 11

NOTICE TO EXECUTIVE BRANCH STATE CONTRACTORS AND PROSPECTIVE STATE CONTRACTORS OF CAMPAIGN CONTRIBUTION AND SOLICITATION BAN

This notice is provided under the authority of Connecticut General Statutes 9-612(g)(2), as amended by P.A. 07-1, and is for the purpose of informing state contractors and prospective state contractors of the following law (italicized words are defined on the following page):

Campaign Contribution and Solicitation Ban

No *state contractor*, *prospective state contractor*, *principal of a state contractor or principal of a prospective state contractor*, with regard to a *state contract* or *state contract solicitation* with or from a state agency in the executive branch or a quasi-public agency or a holder, or principal of a holder of a valid prequalification certificate, shall make a contribution to, or *solicit* contributions on behalf of (i) an exploratory committee or candidate committee established by a candidate for nomination or election to the office of Governor, Lieutenant Governor, Attorney General, State Comptroller, Secretary of the State or State Treasurer, (ii) a political committee authorized to make contributions or expenditures to or for the benefit of such candidates, or (iii) a party committee;

In addition, no holder or principal of a holder of a valid prequalification certificate, shall make a contribution to, or solicit contributions on behalf of (i) an exploratory committee or candidate committee established by a candidate for nomination or election to the office of State senator or State representative, (ii) a political committee authorized to make contributions or expenditures to or for the benefit of such candidates, or (iii) a party committee.

Duty to Inform

State contractors and prospective state contractors are required to inform their principals of the above prohibitions, as applicable, and the possible penalties and other consequences of any violation thereof.

Penalties for Violations

Contributions or solicitations of contributions made in violation of the above prohibitions may result in the following civil and criminal penalties:

Civil penalties--$2000 or twice the amount of the prohibited contribution, whichever is greater, against a principal or a contractor. Any state contractor or prospective state contractor which fails to make reasonable efforts to comply with the provisions requiring notice to its principals of these prohibitions and the possible consequences of their violations may also be subject to civil penalties of $2000 or twice the amount of the prohibited contributions made by their principals.

Criminal penalties—Any knowing and willful violation of the prohibition is a Class D felony, which may subject the violator to imprisonment of not more than 5 years, or $5000 in fines, or both.

Contract Consequences

Contributions made or solicited in violation of the above prohibitions may result, in the case of a state contractor, in the contract being voided.

Contributions made or solicited in violation of the above prohibitions, in the case of a prospective state contractor, shall result in the contract described in the state contract solicitation not being awarded to the prospective state contractor, unless the State Elections Enforcement Commission determines that mitigating circumstances exist concerning such violation.

The State will not award any other state contract to anyone found in violation of the above prohibitions for a period of one year after the election for which such contribution is made or solicited, unless the State Elections Enforcement Commission determines that mitigating circumstances exist concerning such violation.

Additional information and the entire text of P.A 07-1 may be found on the website of the State Elections Enforcement Commission, www.ct.gov/seec. Click on the link to “State Contractor Contribution Ban.”

Definitions:

"State contractor" means a person, business entity or nonprofit organization that enters into a state contract. Such person, business entity or nonprofit organization shall be deemed to be a state contractor until December thirty-first of the year in which such contract terminates. "State contractor" does not include a municipality or any other political subdivision of the state, including any entities or associations duly created by the municipality or political subdivision exclusively amongst themselves to further any purpose authorized by statute or charter, or an employee in the executive or legislative branch of state government or a quasi-public agency, whether in the classified or unclassified service and full or part-time, and only in such person's capacity as a state or quasi-public agency employee.

"Prospective state contractor" means a person, business entity or nonprofit organization that (i) submits a response to a state contract solicitation by the state, a state agency or a quasi-public agency, or a proposal in response to a request for proposals by the state, a state agency or a quasi-public agency, until the contract has been entered into, or (ii) holds a valid prequalification certificate issued by the Commissioner of Administrative Services under section 4a-100. "Prospective state contractor" does not include a municipality or any other political subdivision of the state, including any entities or associations duly created by the municipality or political subdivision exclusively amongst themselves to further any purpose authorized by statute or charter, or an employee in the executive or legislative branch of state government or a quasi-public agency, whether in the classified or unclassified service and full or part-time, and only in such person's capacity as a state or quasi-public agency employee.

"Principal of a state contractor or prospective state contractor" means (i) any individual who is a member of the board of directors of, or has an ownership interest of five per cent or more in, a state contractor or prospective state contractor, which is a business entity, except for an individual who is a member of the board of directors of a nonprofit organization**,** (ii) an individual who is employed by a state contractor or prospective state contractor, which is a business entity, as president, treasurer or executive vice president, (iii) an individual who is the chief executive officer of a state contractor or prospective state contractor, which is not a business entity, or if a state contractor or prospective state contractor has no such officer, then the officer who duly possesses comparable powers and duties, (iv) an officer or an employee of any state contractor or prospective state contractor who has *managerial or discretionary responsibilities with respect to a state contract,* (v) the spouse or a *dependent child* who is eighteen years of age or older of an individual described in this subparagraph, or (vi) a political committee established or controlled by an individual described in this subparagraph or the business entity or nonprofit organization that is the state contractor or prospective state contractor.

"State contract" means an agreement or contract with the state or any state agency or any quasi-public agency, let through a procurement process or otherwise, having a value of fifty thousand dollars or more, or a combination or series of such agreements or contracts having a value of one hundred thousand dollars or more in a calendar year, for (i) the rendition of services, (ii) the furnishing of any goods, material, supplies, equipment or any items of any kind, (iii) the construction, alteration or repair of any public building or public work, (iv) the acquisition, sale or lease of any land or building, (v) a licensing arrangement, or (vi) a grant, loan or loan guarantee. "State contract" does not include any agreement or contract with the state, any state agency or any quasi-public agency that is exclusively federally funded, an education loan or a loan to an individual for other than commercial purposes.

"State contract solicitation" means a request by a state agency or quasi-public agency, in whatever form issued, including, but not limited to, an invitation to bid, request for proposals, request for information or request for quotes, inviting bids, quotes or other types of submittals, through a competitive procurement process or another process authorized by law waiving competitive procurement.

“Managerial or discretionary responsibilities with respect to a state contract” means having direct, extensive and substantive responsibilities with respect to the negotiation of the state contract and not peripheral, clerical or ministerial responsibilities.

“Dependent child” means a child residing in an individual’s household who may legally be claimed as a dependent on the federal income tax of such individual.

“Solicit” means (A) requesting that a contribution be made, (B) participating in any fund-raising activities for a candidate committee, exploratory committee, political committee or party committee, including, but not limited to, forwarding tickets to potential contributors, receiving contributions for transmission to any such committee or bundling contributions, (C) serving as chairperson, treasurer or deputy treasurer of any such committee, or (D) establishing a political committee for the sole purpose of soliciting or receiving contributions for any committee. Solicit does not include: (i) making a contribution that is otherwise permitted by Chapter 155 of the Connecticut General Statutes; (ii) informing any person of a position taken by a candidate for public office or a public official, (iii) notifying the person of any activities of, or contact information for, any candidate for public office; or (iv) serving as a member in any party committee or as an officer of such committee that is not otherwise prohibited in this section.

REQUEST FOR PROPOSALS

FOR

MEDIUM VOLTAGE INTERCONNECTION
FROM MIRA PV TO HARTFORD DPW

SECTION 6

(FORM OF) AGREEMENT FOR MEDIUM VOLTAGE INTERCONNECTION FROM MIRA PV TO HARTFORD DPW

AGREEMENT FOR
MEDIUM VOLTAGE INTERCONNECTION
FROM MIRA PV TO HARTFORD DPW
MATERIALS INNOVATION AND RECYCLING AUTHORITY

CONTENTS

PRELIMINARY STATEMENT 3
1. DEFINITIONS, CONSTRUCTION AND INTERPRETATION 3
   1.1 Definitions 3
   1.2 Construction And Interpretation 5
2. SCOPE OF WORK 5
   2.1 Contractor's Responsibilities 5
   2.2 Performance and Completion of the Work 6
   2.3 MIRA's Responsibilities 7
   2.4 Direction of Work 7
   2.5 MIRA's Inspection Rights 7
   2.6 Access 7
   2.7 MIRA Right to Exclude Certain Individuals 8
   2.8 Change in Scope of Work 8
   2.9 Site and Subsurface Conditions 8
   2.10 Methane Gases 9
   2.11 Proprietary Information 9
   2.12 Books and Records 9
   2.13 Status of Contractor 10
   2.14 Subcontractors 10
   2.15 Contractor's Employees 10
   2.16 Notice of Damage or Theft 10
   2.17 Mechanic's Liens 11
3. COMPENSATION AND PAYMENT 11
   3.1 Compensation 11
   3.2 Payment Procedure 11
   3.3 Accounting Obligations 12
   3.4 Withholding Taxes And Other Payments 12
   3.5 State of Connecticut Taxes 13
4. TERM OF AGREEMENT 13
   4.1 Term 13
   4.2 Time is of the Essence 14
   4.3 Termination 14
   4.4 Restoration 15
5. INDEMNIFICATION 15
   5.1 Contractor's Indemnity 15
6. INSURANCE 16
   6.1 Insurance 16
   6.2 Minimum Limits of Insurance 16
7. SECURITY FOR FAITHFUL PERFORMANCE 19
   7.1 Required Security 19
   7.2 Submission Of Security 19
   7.3 Specific Requirements – Performance Bond and Payment Bond 19
   7.4 Specific Requirements – Performance Letter Of Credit and Payment Letter Of Credit 19
   7.5 Failure To Maintain The Security 20

7.6 Exercise Of Rights And Remedies 20
7.7 Issuing Companies 20
8. MISCELLANEOUS 20
8.1 Non-Discrimination 20
8.2 Entire Agreement 21
8.3 Governing Law 21
8.4 Assignment 21
8.5 No Waiver 22
8.6 Modification 22
8.7 Notices 22
8.8 Binding Effect 23
8.9 Severability 23
8.10 Whistleblower Protection 23
8.11 Counterparts 23
8.12 Campaign Contribution And Solicitation Prohibitions 23
8.13 Affidavit Concerning Nondiscrimination 24
8.14 Affidavit Concerning Consulting Fees 24
8.15 Contractor's Certification Concerning Gifts 24
8.16 President's Certification Concerning Gifts 24

Exhibit A: Construction Drawings
Exhibit B: General Requirements
Exhibit C: Technical Specifications
Exhibit D: Project Schedule
Exhibit E: Compensation Schedule
Exhibit F: Performance Security
Exhibit G: Payment Security
Exhibit H: SEEC Form 11, Notice To Executive Branch State Contractors And Prospective State Contractors Of Campaign Contribution And Solicitation Ban
Exhibit I: Affidavit Concerning Nondiscrimination
Exhibit J: Affidavit Concerning Consulting Fees
Exhibit K: Contractor's Certification Concerning Gifts
Exhibit L: MIRA President's Certification Concerning Gifts

This **AGREEMENT FOR MATERIALS INNOVATION AND RECYCLING AUTHORITY MEDIUM VOLTAGE INTERCONNECTION FROM MIRA PV TO HARTFORD DPW** (the "Agreement") is made and entered into as of this _____ day of _____, 2015 by and between the **MATERIALS INNOVATION AND RECYCLING AUTHORITY**, a body politic and corporate, constituting a public instrumentality and political subdivision of the State of Connecticut, having its principal offices at 100 Constitution Plaza, 6th Floor, Hartford, Connecticut 06103 (hereinafter "MIRA" or "Owner") and **[NAME OF SUCCESSFUL BIDDER]**, having its principal offices at [ADDRESS OF SUCCESSFUL BIDDER] (hereinafter "Contractor").

PRELIMINARY STATEMENT

WHEREAS MIRA owns a solar generating facility (the "MIRA PV") located on a certain parcel of real property located at 180 Leibert Road in Hartford, Connecticut, (the "Hartford Landfill" or "Landfill").

WHEREAS, The City of Hartford, Connecticut ("Hartford") owns a certain parcel of real property located at 50 Jennings Roadin Hartford, Connecticut (the "Hartford DPW"); and

WHEREAS, MIRA and Hartford (the "PPA Parties) have entered into a Power Purchase Agreement and a Long-Term Access Agreement (collectively, the "PPA") for MIRA to sell a portion of the electricity generated by the MIRA PV to Hartford; and

WHEREAS, the PPA, authorizes MIRA to contract for the Work herein this Agreement and further authorizes MIRA to provide to the Contractor access to the Property to complete the Work; and

WHEREAS MIRA and Contractor now desire to enter into this Agreement for the provision by Contractor of a medium-voltage interconnection from the MIRA PV to the Hartford DPW in accordance with the Contract Documents

NOW, THEREFORE, in consideration of the mutual covenants, promises, and representations contained herein, and for other good and valuable consideration, the receipt and sufficiency of which are hereby acknowledged, the parties hereto agree as follows.

1. DEFINITIONS, CONSTRUCTION AND INTERPRETATION

1.1 Definitions

As used in this Agreement and in other Contract Documents (as defined herein) the following terms shall have the meanings as set forth below:

1.1.1 Addenda

"Addenda" means written or graphic documents issued prior to the bid due date, which clarify, correct or change any or all of the Contract Documents.

1.1.2 Acceptance Date

"Acceptance Date" means the date on which MIRA determines that the Work (as defined herein) has been completed by Contractor in accordance with the Contract Documents.

1.1.3 Contract Documents

"Contract Documents" means this Agreement (including all exhibits attached hereto), the Notice To Proceed (as defined herein), any written amendments to any of the Contract Documents and any change order issued pursuant to Section 2.8 or Modification issued pursuant to 8.6 hereof.

1.1.4 Effective Date

"Effective Date" means the date set forth above in this Agreement.

1.1.5 Laws And Regulations

"Laws And Regulations" means any and all applicable current or future laws, rules, regulations, ordinances, codes, orders and permits of any and all federal, state and local governmental and quasi-governmental bodies, agencies, authorities and courts having jurisdiction.

1.1.6 Project

"Project" means all of the Work associated with this Agreement.

1.1.7 Property

"Property" means collectively the real property on which the Work will occur, incuding the Hartford Landfill, the Hartford DPW, and any other real property identified in the Contract Documents necessary for the installation of the interconnection.

1.1.8 Site

"Site" means those areas of the Property upon which the Work is to be performed, furnished and completed by Contractor in accordance with the Contract Documents, including those areas of the Property where equipment is stored and/or staged

1.1.9 Work

The obligations of the Contractor under the Contract Documents including the requirements of items (a) through (d) of Section 2.1 of the Agreement are hereinafter collectively referred to as the "work."

1.2 Construction And Interpretation

For purposes of this Agreement:

(a) Capitalized terms used herein shall have the meanings set forth herein;

(b) Whenever nouns or pronouns are used in this Agreement, the singular shall mean the plural, the plural shall mean the singular, and any gender shall mean all genders or any other gender, as the context may require;

(c) Words that have well-known technical or trade meanings are used herein in accordance with such recognized meanings unless otherwise specifically provided;

(d) All accounting terms not otherwise defined herein have the meanings assigned to them in accordance with "generally accepted accounting principles," and the term "generally accepted accounting principles" with respect to any computation required or permitted hereunder shall mean such accounting principles that are generally accepted as of the Effective Date of this Agreement;

(e) The words "herein", "hereof" and "hereunder" and words of similar import refer to this Agreement as a whole and not to any particular Article, Section or Subsection;

(f) Reference to any particular party shall include that party's employees and the authorized agents of that party;

(g) All references to agreements are references to the agreements as the provisions thereof that may be amended, modified or waived from time to time; and,

(h) The captions contained in this Agreement have been inserted for convenience only and shall not affect or be effective to interpret, change or restrict the terms of provisions of this Agreement.

(i) All Exhibits to this Agreement are incorporated into the body of this Agreement as part hereof.

2. SCOPE OF WORK

2.1 Contractor's Responsibilities

Contractor shall be responsible for:

(a) The work involves mobilization and establishing temporary facilities, location and protection of underground and overhead utilities, location and establishment of existing rights-of-way in the project area to avoid installation of any portion of the project within a public right-of-way, preparation of the site, earthwork, installation of several utility poles and

pole extensions, installation of underground electrical conduit in concrete duct bank, excavation and removal of materials, removal of trees, installation of medium voltage electric wire including triplex transmission lines, installation of a new pad mounted weatherproof equipment cabinet including power panel and communication equipment, installation of a new 500kva pad mounted transformer, removal of existing REC meter, coordination with MIRA, CTDEEP, Eversource, and the City of Hartford, applying for and obtaining all permits, and all work necessary to connect the existing Solar EGF at the Hartford Landfill to 50 Jennings Road, and performing all other work required for the Project; performing all of such activities is in accordance with and as required by the Contract Documents, including but not limited to, the plans set forth in **Exhibit A** (the "Plans" or "Construction Drawings"), the general requirements set forth in **Exhibit B** (the "General Requirements") and the specifications set forth in **Exhibit C** (the "Specifications") all of which are attached hereto and made a part hereof;

(b) Furnishing all labor, materials, supplies, tools, equipment and other facilities and necessary appurtenances or property for or incidental to the Project and the performance and completion of the Work (as hereinafter defined);

(c) Restoring any part of the Property, the improvements thereon, or the Work (as hereinafter defined) that require restoration pursuant to the terms and conditions in Section 4.4 hereof; and

(d) Making all required notifications and obtaining all local, state, and federal permits and approvals necessary for the completion of the Work.

Items (a) through (d) above are hereinafter collectively referred to as the "Work."

2.2 Performance and Completion of the Work

All Work shall be performed and completed by Contractor in a good workmanlike manner consistent and in accordance with:

(a) Any and all instructions, guidance and directions provided by MIRA to Contractor;

(b) The Contract Documents;

(c) Sound equipment operation practices;

(d) The highest industry standards applicable to Contractor and its performance of the Work hereunder;

(e) The schedule for the Work set forth in **Exhibit D** attached hereto and made a part hereof; and

(f) All Laws And Regulations.

Items (a) through (f) above are hereinafter collectively referred to as the "Standards."

Contractor shall obtain any locally required building or other permits required for the Work, as specified in Section 2.1(a) of this Agreement..

2.3 MIRA's Responsibilities

MIRA shall be responsible for:

a. Administering this Agreement;

b. accepting the Work that is performed and completed by Contractor in accordance with the Contract Documents;

c. receiving and paying invoices for such Work; and

d. obtaining City's agreement to the Work and the proposed schedule.

2.4 Direction of Work

MIRA may, where necessary or desired, provide Contractor with instructions, guidance and directions in connection with Contractor's performance of the Work hereunder. MIRA reserves the right to determine whether Contractor will, upon completion of any phase of the Work, proceed to any or all remaining phases of the Work. If MIRA determines that Contractor shall not proceed with the remaining Work, MIRA shall terminate this Agreement in accordance with Section 4.3 hereof.

2.5 MIRA's Inspection Rights

Contractor's performance of the Work hereunder, as well as Contractor's work products resulting from such performance, are subject to inspection by MIRA. Inspections may be conducted at any time by MIRA. In the event of an inspection, Contractor shall provide to MIRA any documents or other materials that may be necessary in order for MIRA to conduct the inspection. If, after any such inspection, MIRA is unsatisfied with Contractor's performance of the Work hereunder or any of the work products resulting therefrom, Contractor shall, at the direction of MIRA, render such performance or work products satisfactory to MIRA at no additional cost or expense to MIRA and without any extension of or addition to any schedule included in a Request. For purpose of this Section 2.5, MIRA shall mean MIRA and/or its authorized agents.

2.6 Access

MIRA hereby grants to Contractor, during such times as directed by MIRA, access to only those areas of the Property necessary for Contractor to perform the Work hereunder, provided that:

(a) Contractor shall not interfere with any other operations or activities being conducted at the Property by either MIRA, the City of Hartford, or any other person or entity;

(b) Contractor directly coordinates with MIRA and the City of Hartford as outlined in the Contract Documents on such access and Contractor's storage of any equipment or materials on the Property; and

(c) Contractor is in compliance with all of the terms and conditions of this Agreement

MIRA reserves the right to revoke the access granted to Contractor herein if Contractor fails to comply with any of the foregoing conditions of access.

2.7 MIRA Right to Exclude Certain Individuals

Without limitation of Contractor's overall responsibility for the acts and omissions of all on-site personnel and other employees, MIRA reserves the right to exclude anyone from the site who MIRA reasonably believes is a danger to themselves or any other Person, or the Hartford Landfill.

2.8 Change in Scope of Work

In the event that MIRA determines during the term of this Agreement that any revisions, modifications or changes are necessary to the Scope of Work then pursuant to MIRA's request, Contractor shall promptly commence and perform the work required for such revisions, modifications or changes, which work shall be performed in accordance with the Standards unless otherwise specifically agreed to in writing by MIRA and Contractor. Changes in the Scope of Work shall be administered as outlined in Section 01035 of the General Requirements "Modification Procedures". If any adjustment(s) to the time and/or cost estimates are required as a result of such revisions, modifications or changes, MIRA and Contractor shall mutually agree in writing on the amount of such adjustment(s) provided that **Exhibit E**, to the extent applicable, shall be used to determine the appropriate increase or decrease in the quantity or cost of the materials or Work necessitated by such revisions, modifications or changes. Contractor shall promptly commence and perform any work required by such revisions, modifications or changes even if MIRA and Contractor cannot agree on the amount of such adjustment(s). If Contractor determines that a change in scope is necessary to complete the Work, Contractor shall notify MIRA in writing within three (3) business days.

2.9 Site and Subsurface Conditions

All information and data shown or indicated in the Contract Documents with respect to underground facilities, surface conditions, subsurface conditions or other conditions at or contiguous to the Landfill are furnished for information only and MIRA does not assume any responsibility for the accuracy or completeness of such information and data. Contractor acknowledges and agrees that MIRA does not assume any responsibility for such information

and data and that Contractor is solely responsible for investigating and satisfying itself as to all actual and existing conditions at the Site , including but not limited to surface conditions, subsurface conditions and underground facilities Contractor has carefully studied all such information and data and Contractor has obtained and carefully studied (or assumes responsibility for having done so) all such additional or supplementary examinations, investigations, explorations, tests, studies and data concerning conditions (including but not limited to surface conditions, subsurface conditions and underground facilities) at or contiguous to the Site and all other conditions or factors which may affect cost, progress, performance, furnishing or completion of the Work or which relate to any aspect of the means, methods, techniques, sequences, and procedures of construction or performance of the Work to be employed by Contractor and safety precautions and programs incident thereto. Contractor does not consider that any additional examinations, investigations, explorations, tests, studies or data are necessary for Contractor to conclusively determine, and Contractor has so determined, that the Work can be performed, furnished and completed in accordance with the terms and conditions of the Contract Documents. In the event that the information or data shown or indicated in the Contract Documents with respect to underground facilities or surface, subsurface or other conditions at or contiguous to the Site differs from conditions encountered by Contractor during performance of the Work, there shall be no increase in the Contract Prices (as defined in Section 3.1 below) and/or no extension of time to perform any work requested by MIRA as a result of such differing conditions, unless MIRA, in its sole and absolute discretion, agrees to such increase and/or extension.

2.10 Methane Gases

Contractor acknowledges the presence of methane gases at the Property. Contractor covenants and agrees that it and its employees, agents, sub-contractors and materialmen shall take all necessary precautions with respect to the presence of methane gases at all times at the Properties, including, but not limited to, prohibiting the presence of any open flames, sparks, smoking or any other activity which might ignite any of the methane gases present at the Properties.

2.11 Proprietary Information

Contractor shall not use, publish, distribute, sell or divulge any information obtained from MIRA by virtue of this Agreement for Contractor's own purposes or for the benefit of any person, firm, corporation or other entity (other than MIRA) without the prior written consent of MIRA. Any report or other work product prepared by Contractor in connection with the performance of the Work hereunder shall be owned solely and exclusively by MIRA and cannot be used by Contractor for any purpose beyond the scope of this Agreement without the prior written consent of MIRA.

2.12 Books and Records

Contractor shall maintain proper books and records containing complete and correct information on all Work performed by Contractor pursuant to this Agreement in accordance with

generally accepted accounting principles and practices. MIRA has the right to inspect and review all such books and records during Contractor's business hours.

2.13 Status of Contractor

MIRA and Contractor acknowledge and agree that Contractor is acting as an independent contractor in performing any Work for MIRA hereunder and that Contractor shall perform such Work in its own manner and method subject to the terms of this Agreement. Nothing in this Agreement shall be construed or interpreted as creating a partnership, a joint venture, an agency, a master-servant relationship, an employer-employee relationship or any other relationship between MIRA and Contractor other than that of an owner and an independent contractor. Contractor is expressly forbidden from transacting any business in the name of or on account of MIRA, and Contractor has no power or authority to assume or create any obligation or responsibility for or on behalf of MIRA in any manner whatsoever.

2.14 Subcontractors

Contractor shall consult with MIRA and obtain its approval before hiring any subcontractors to perform any Work hereunder. Contractor shall require all of its subcontractors to abide by the terms and conditions of this Agreement. Moreover, Contractor's subcontracts with such subcontractors shall specifically provide that, in the event of a default by Contractor thereunder or under this Agreement, MIRA may directly enforce such subcontracts and make payments thereunder. Contractor shall provide MIRA with all contracts, amendments, books, records, accounts, correspondence and other materials necessary to enforce such subcontracts. Also Contractor's subcontracts with its subcontractors shall specifically include MIRA as a third party beneficiary and shall provide that such subcontractors shall not be excused from any of their obligations under such subcontracts by reason of any claims, setoffs, or other rights whatsoever that they may have with or against Contractor other than through such subcontracts.

2.15 Contractor's Employees

All persons employed by Contractor shall be subject and responsible solely to the direction of Contractor and shall not be deemed to be employees of MIRA.

2.16 Notice of Damage or Theft

Contractor shall immediately upon learning of an incident of damage to or theft of any MIRA equipment or property provide the MIRA with notice of the same, followed by an incident report. Such incident report shall be in a format acceptable to MIRA but shall at a minimum contain the date and time of the incident (if known), a description of the missing or damaged equipment or property, and the party(ies) responsible for such theft or damage.

2.17 Mechanic's Liens

Contractor shall claim no interest in the Properties or any equipment, fixtures or improvements located or to be located thereon, including but not limited to the Landfills or any part thereof. Contractor shall not file any mechanic's liens or other liens or security interests against MIRA or any of its properties, including but not limited to the Properties. Contractor shall defend, indemnify and hold harmless MIRA against all costs associated with the filing of such liens or interests by Contractor or any of its subcontractors or materialmen. Before any subcontractor or materialman of Contractor commences any Work hereunder, Contractor shall deliver to MIRA an original waiver of mechanic's liens properly executed by such subcontractor or materialman. If any mechanic's lien is filed against MIRA or any of its properties in connection with the Work hereunder, Contractor shall cause the same to be canceled and discharged of record within fifteen (15) days after the filing of such lien and, if Contractor fails to do so, MIRA may, at its option but without any obligation to do so, make any payment necessary to obtain such cancellation or discharge and the cost thereof, at MIRA's election, shall be either deducted from any payment due to Contractor hereunder or reimbursed to MIRA promptly upon demand by MIRA to Contractor.

3. COMPENSATION AND PAYMENT

3.1 Compensation

The total amount of compensation to be paid to Contractor by MIRA for the Work hereunder shall not exceed the amount set forth in **Exhibit E** attached hereto and made a part hereof (the "Contract Price"), which Contract Price shall be payable as set forth in Section 3.2 below. Contractor acknowledges and agrees that the Contract Price constitutes the full compensation to Contractor for the Work to be performed by Contractor hereunder and includes all expenses and costs to be incurred by Contractor in performing such Work and Contractor shall receive no other compensation from MIRA for its performance under this Agreement.

3.2 Payment Procedure

Within ten (10) days after execution of this Agreement, Contractor shall submit to MIRA a Schedule of Values, which itemizes all costs carried in each Proposal Item. The Schedule of Values will be used to track the cost of the project and shall be used as the basis for preparing monthly invoices.

Within ten (10) days after the end of each month during the term hereof, Contractor shall submit to MIRA a written request for payment for all the Work completed by Contractor during such month. Each written request for payment shall be submitted on AlA Forms G702 and G703 and in accordance with the General Requirements, and each such request shall include the name of the Project, the contract number, and all of the other information and documentation required by the General Requirements. The Schedule of Values shall be submitted with each monthly invoice.

If MIRA determines in its sole and absolute discretion that the Work for which Contractor is requesting payment has been properly performed and completed in conformance with the Standards, Contractor is not in default hereunder and MIRA does not dispute the amount of the payment requested, then MIRA shall pay Contractor ninety-eight (98%) percent of the amount requested (the "Authorized Percentage Sum") within thirty (30) days after MIRA's receipt of such written request, and MIRA shall withhold the remaining two (2%) percent of such amount as retainage ("Retainage"). If, however, MIRA determines that any of the Work for which Contractor has requested payment is not in conformance with the Standards, then MIRA may in its sole and absolute discretion also withhold all or a portion of the Authorized Percentage Sum, and Contractor shall, if requested by MIRA, immediately take, at Contractor's sole cost and expense, all action necessary to render such Work in conformance with the Standards. MIRA shall have no obligation under this Agreement to pay for any Work that MIRA determines has not been performed and/or completed in conformance with the Standards.

Within ten (10) days after the Acceptance Date, Contractor shall submit to MIRA a written request for payment of all Retainage, and, provided Contractor is not in default hereunder and MIRA does not dispute the amount of such requested payment, MIRA shall pay Contractor such Retainage within thirty (30) days after MIRA's receipt of such written request. MIRA shall have no obligation to pay Contractor any amounts due Contractor under this Agreement if Contractor is in default hereunder.

Applications for Payment are further detailed in Section 01027 of the General Requirements "Application for Payment."

3.3 Accounting Obligations

Contractor shall maintain books and accounts of the costs incurred by Contractor in performing the Work pursuant to this Agreement by contract number and in accordance with generally accepted accounting principles and practices. MIRA, during normal business hours, for the duration of this Agreement, shall have access to such books and accounts to the extent required to verify such costs incurred.

3.4 Withholding Taxes And Other Payments

No FICA (social security) payroll tax, state or federal income tax, federal unemployment tax or insurance payments, state disability tax or insurance payments or state unemployment tax or insurance payments shall be paid or deposited by MIRA with respect to Contractor, nor be withheld from payment to Contractor by MIRA. No workers' compensation insurance has been or will be obtained by MIRA on account of the Work to be performed hereunder by Contractor, or any of Contractor's employees or subcontractors. Contractor shall be responsible for paying or providing for all of the taxes, insurance and other payments described or similar to those described in this Section 3.4 and Contractor hereby agrees to indemnify MIRA and hold MIRA harmless against any and all such taxes, insurance or payments, or similar costs which MIRA may be required to pay in the event that Contractor's status hereunder is determined to be other than that of an independent contractor.

3.5 State of Connecticut Taxes

Pursuant to Section 22a-270 of the *Connecticut General Statutes* (as the same may be amended or superseded from time to time), MIRA is exempt from all State of Connecticut taxes and assessments ("Connecticut Taxes"), and the payment thereof. Without limiting the generality of the preceding sentence, the sale of any services or tangible personal property to be incorporated into or otherwise consumed in the operation of a MIRA Project is exempt from Connecticut Taxes, including without limitation Connecticut sales and use taxes, wherever purchased. Accordingly, Contractor shall not include in the fees, and Contractor shall not charge or pass through any Connecticut Taxes to MIRA, including that portion of any combined tax or assessment representing any Connecticut Taxes, regardless of whether Contractor has incurred any Connecticut State Taxes in its performance of the Agreement.

MIRA expresses no opinion as to the eligibility for any tax exemption, or refund or other reimbursement, including without limitation any Connecticut Taxes, with respect to tangible personal property purchased at any location for use in the performance of Work contemplated by this Agreement.

Contractor should consult with its tax advisor and/or its attorney, and the Connecticut Department of Revenue Services ("DRS") and any other applicable tax authority, with regard to such tax authorities' policies, procedures, recordkeeping and filing requirements for reimbursement of any taxes, including without limitation Connecticut Taxes, paid in the performance of Work contemplated by this Agreement, and whether or not there is a mechanism available to Contractor for the reimbursement of taxes, including without limitation Connecticut Taxes, paid on fuel purchased for use in the performance of the Work contemplated by this Agreement.

Contractor and MIRA agree that Contractor is and shall act as an independent contractor. Notwithstanding Contractor's status as an independent contractor, but without limiting Contractor's obligation hereunder to pay, and be solely responsible for, any Connecticut taxes levied, imposed or applicable to the Work, for the sole purpose of allowing MIRA to benefit from the aforesaid exemption, MIRA shall designate, and Contractor has agreed to act, as MIRA's agent in purchasing services and equipment, machinery, parts, materials, supplies, inventories, fuel, and other items necessary to perform the Work hereunder for the account of MIRA, and with funds provided as reimbursement therefor by MIRA.

4. TERM OF AGREEMENT

4.1 Term

The term of this Agreement shall commence upon the Effective Date and shall terminate, unless otherwise terminated or extended in accordance with the terms and provisions hereof, twelve (12 months after Contractor's receipt of final payment made by MIRA.

Contractor shall retain and maintain accurate records and documents relating to the performance of Work under this Agreement for a minimum of three (3) years after final payment by MIRA for the Work hereunder and shall make them available for inspection and audit by MIRA. Contactor's obligations under this paragraph shall survive the termination or expiration of this Agreement.

4.2 Time is of the Essence

MIRA and Contractor hereby acknowledge and agree that time is of the essence with respect to Contractor's performance of the Work hereunder. Accordingly, upon MIRA's issuance to Contractor of a notice to proceed with the Work (the "Notice To Proceed"), which Notice To Proceed shall be issued after the parties hereto receive all of the local, state and federal permits required for the Work hereunder, Contractor shall immediately commence performance of the Work and continue to perform the same during the term of this Agreement in accordance with the schedule set forth in attached **Exhibit D** in order to complete all of the Work and have such Work ready for MIRA's acceptance as specified in **Exhibit D** following the issuance of such Notice To Proceed (the "Completion Date").

MIRA and Contractor recognize the difficulties involved in proving actual damages and losses suffered by MIRA if the Work is not completed and ready for MIRA's acceptance by the Completion Date. Accordingly, instead of requiring any such proof, MIRA and Contractor agree that as liquidated damages for any such delay in completion or readiness for acceptance (but not as a penalty) Contractor shall pay MIRA two hundred dollars ($200.00) for each calendar day beyond the Completion Date that Contractor fails to complete all of the Work or have the same ready for MIRA's acceptance until all such Work is completed by Contractor and readied by Contractor for acceptance by MIRA. The parties further agree that liquidated damages in this Section 4.2 are reasonable and have been agreed upon and intended by the parties because the damages expected under this Section are uncertain and difficult to prove.

4.3 Termination

MIRA may terminate this Agreement at any time by providing Contractor with ten (10) days' prior written notice of such termination. Upon receipt of such written notice from MIRA, Contractor shall immediately cease performance of all Work, unless otherwise directed in writing by MIRA. Prior to any termination of this Agreement, Contractor shall remove all of its personnel and equipment associated with this Agreement from the Properties, restore any part of the Properties, any of the improvements located or to be located thereon, including but not limited to any access roads, or any of the Work that requires restoration pursuant to the terms and conditions of Section 4.4 hereof. Upon termination of this Agreement pursuant to this Section 4.3,

(a) MIRA shall pay Contractor for all Work performed and completed by Contractor prior to the termination date, provided:

(1) Such Work has been performed and completed by Contractor in conformance with the Standards;

(2) Payment for such Work has not been previously made or is not disputed by MIRA;

(3) Contractor is not in default hereunder; and,

(4) Contractor has performed and completed all its obligations under this Section 4.3 and Section 4.4 hereof to MIRA's satisfaction, and

(b) MIRA shall have no further liability hereunder.

Except for the payment that may be required pursuant to the preceding sentence, MIRA shall not be liable to Contractor in any other manner whatsoever in the event MIRA exercises its right to terminate this Agreement.

4.4 Restoration

Unless otherwise directed in writing by MIRA, Contractor shall:

(a) Restore any part of the Properties or any of the improvements located or to be located thereon, other than those areas of the Properties or such improvements improved by Contractor pursuant to this Agreement, disturbed or damaged by Contractor or any of its directors, officers, employees, agents, subcontractors or materialmen to the same condition existing immediately prior to such disturbance or damage; and

(b) Restore or repair any completed Work so disturbed or damaged to the condition required by the Contract Documents for acceptance of such Work by MIRA.

5. INDEMNIFICATION

5.1 Contractor's Indemnity

Contractor shall at all times defend, indemnify and hold harmless MIRA and the City of Hartford and their respective board of directors, officers, agents and employees from and against any and all claims, damages, losses, judgments, liability, workers' compensation payments and expenses (including but not limited to attorneys' fees) arising out of injuries to the person (including death), damage to property or any other damages alleged to have been sustained by: (a) MIRA or any of its directors, officers, agents, employees or other contractors, or (b) Contractor or any of its directors, officers, agents, employees, subcontractors or materialmen, or (c) any other person, to the extent any such injuries, damage or damages are caused or alleged to have been caused in whole or in part by the acts, omissions or negligence of Contractor or any of its directors, officers, agents, employees, subcontractors or materialmen. Contractor further undertakes to reimburse MIRA for damage to property of MIRA or of the City of Harford caused by Contractor or any of its directors, officers, agents, employees, subcontractors or materialmen, or by faulty, defective or unsuitable material or equipment used by it or any of them. The existence of insurance shall in no way limit the

scope of this indemnification. Contractor's obligations under this Section 5.1 shall survive the termination or expiration of this Agreement.

6. INSURANCE

6.1 Insurance

At all times during the term of this Agreement, Contractor shall, at its sole cost and expense, procure and maintain the insurance coverages described below for claims which may arise from or in connection with the Work performed by the Contractor and those for whom they are legally responsible.

(a) Minimum Scope of Insurance

Coverage shall be at least as broad as:

1. Commercial General Liability insurance as specified by the most recent version of ISO Form Number CG 001 (occurrence).

2. Automobile Liability insurance as specified by the most recent edition of ISO Form Number CA 0001, Symbol 1 (any auto**).** An MCS 90 Endorsement and a CA 9948 Endorsement shall be attached **if any hazardous materials are transported by the Contractor during its performance of the Work.**

3. Workers' Compensation insurance as required by all states in which the Work is being done and Employer's Liability insurance.

4. Contractor's Pollution liability insurance.

5. Professional Liability insurance if the Contractor or any subcontractor to them is providing engineering, construction management, and/or design services. The Professional Liability insurance should include coverage for all professional services related to the Work (including design work that preceded this Agreement) and should be kept in force for a completed operations period of at least five years after final completion of the Work.

6.2 Minimum Limits of Insurance

Contractor shall maintain the following limits of liability for the insurance described above:

1. Commercial General Liability:
    a. $1,000,000 Each Occurrence for Bodily Injury & Property Damage.

b. $2,000,000 General Aggregate
c. $2,000,000 Products & Completed Operations Aggregate
d. $1,000,000 Personal & Advertising Injury

2. Automobile Liability:
    a. $1,000,000 Combined Single Limit Each Accident for Bodily Injury and Property Damage.
    b. Include Owned, Hired and Non-Owned Auto Liability

3. Workers' Compensation: Statutory limits.

4. Employer's Liability:

    a. $500,000 Each Accident
    b. $500,000 Disease – Policy Limit
    c. $500,000 Disease – Each Employee

5. Excess/Umbrella Liability:

    a. $5,000,000 Each Occurrence/Aggregate; schedule the General Liability, Automobile Liability, and Employers Liability and follow form with the underlying terms.

6. Contractor's Pollution Liability with a limit of $2,000,000.

7. Professional liability: $1,000,000 Each Occurrence with a limit of $1,000,000.

8. Contractor's Property Insurance covering 100% the actual cash value of Contractor's equipment .

(a) Deductibles, Self-insured Retentions and Uninsured Losses

The Contractor shall be responsible for payment of all deductibles and self-insured retentions on any of the insurance policies required under this Agreement. The Contractor is also responsible for the payment of all losses arising out of its performance of the Work that may not be covered by the insurance policies required under this Agreement.

(b) Other Insurance Provisions

All policies required under this Agreement shall contain the following provisions:

1. MIRA, and the City of Hartford, and their respective subsidiaries, officials and employees are to be covered as additional insureds on a primary and non-contributing basis on the following insurance policies purchased by the Contractor:

a. Commercial General Liability
b. Automobile Liability
c. Contractor's Pollution Liability

2. The Contractor agrees to notify MIRA at least thirty (30) days in advance of any cancellation or change to insurance coverages required under this Agreement. Notice of cancellation or change in coverage shall be provided to MIRA's Risk Manager by fax to 860-757-7740, or by e-mail to riskmanager@ctmira.org, or by correspondence to MIRA, 100 Constitution Plaza, 6th Floor, Hartford, Connecticut 06103-1722.

3. The Contractor should waive (and require their insurers to waive) subrogation rights against MIRA for losses and damages incurred under the insurance policies required by this Agreement.

4. The Contractor's insurance shall apply separately to each insured against whom claim is made or suit is brought, except with respect to the limits of the insurer's liability.

(c) Acceptability of Insurance

Insurance is to be placed with insurers with current A.M. Best ratings of not less than A-VIII, and be lawfully authorized to conduct business in the state(s) or jurisdiction(s) where the Work is being performed, unless otherwise approved by MIRA.

(d) Verification of Coverage

Contractor shall furnish MIRA with a Certificate of Insurance evidencing the coverages required under this Agreement. All certificates are to be received and approved by MIRA before the Work commences. Contractor shall provide new Certificates of Insurance upon renewal, replacement or addition of any insurance required under this Agreement.

(e) Subcontractors

Contractor shall either include all subcontractors as insureds under its insurance policies or shall require subcontractors to provide their own insurance subject to all of the requirements stated herein.

7. SECURITY FOR FAITHFUL PERFORMANCE

7.1 Required Security

Subsequent to the execution of this Agreement and prior to the commencement of the Work, Contractor shall procure and maintain in full force and effect, at its own cost and expense, throughout the term of the Agreement and any extensions thereof, the following:

(a) A performance bond or letter of credit (the "Performance Bond" or the "Performance Letter Of Credit") in the amount of one hundred percent of the Contract Price and such Performance Bond or Performance Letter Of Credit shall be in and drawn on the forms set forth in **Exhibit F** attached hereto and made a part hereof; and

(b) A payment bond or letter of credit (the "Payment Bond" or the "Payment Letter Of Credit") in the amount of one hundred percent of the Contract Price and such Construction Payment Bond or Payment Letter Of Credit shall be in and drawn on the forms set forth in **Exhibit G** attached hereto and made a part hereof.

7.2 Submission Of Security

Within ten (10) days after MIRA issues the Notice of Award and prior to the issuance of the Notice to Proceed, Contractor shall furnish MIRA with the following:

(a) The Performance Bond or the Performance Letter Of Credit; and

(b) The Payment Bond or the Payment Letter Of Credit.

7.3 Specific Requirements – Performance Bond and Payment Bond

If the surety on the Performance Bond and/or the Payment Bond furnished by Contractor is declared a bankrupt or becomes insolvent or its right to do business is terminated in the State of Connecticut or it ceases to meet the above requirements or the surety elects not to renew the Performance Bond and/or the Payment Bond due to no fault of Contractor, Contractor shall immediately substitute another bond and surety, subject to the requirements set forth in this Article 7.

7.4 Specific Requirements – Performance Letter Of Credit and Payment Letter Of Credit

The Performance Letter Of Credit and/or Payment Letter Of Credit required hereunder shall be automatically renewed by Contractor on an annual basis, unless not later than ninety (90) days prior to the then current expiration date of the Performance Letter Of Credit and/or Payment Letter Of Credit, Contractor notifies MIRA by registered mail that the issuer of the Performance Letter Of Credit and/or Payment Letter Of Credit elects not to renew such Performance Letter Of Credit and/or Payment Letter Of Credit. If the issuer of the Performance Letter Of Credit and/or Payment Letter Of Credit furnished by Contractor is declared a bank-

rupt or becomes insolvent or its right to do business is terminated in the State of Connecticut or it ceases to meet the above requirements or the issuer elects not to renew the Performance Letter Of Credit and/or the Payment Letter Of Credit due to no fault of Contractor, Contractor shall immediately substitute another letter of credit (or bond) and surety, subject to the requirements set forth in this Article 7.

7.5 Failure To Maintain The Security

Failure to maintain or renew the Performance Bond, the Performance Letter Of Credit, the Payment Bond and/or the Payment Letter Of Credit under the aforesaid terms shall constitute a default by Contractor of this Agreement.

7.6 Exercise Of Rights And Remedies

In the event Contractor fails to perform any of its obligations under this Agreement, MIRA shall have the right, in addition to all other rights and remedies available to MIRA hereunder or otherwise, to exercise any or all of MIRA's rights and remedies under the Performance Bond, the Performance Letter Of Credit, the Payment Bond and the Payment Letter Of Credit.

7.7 Issuing Companies

The Performance Bond and the Payment Bond shall be issued and executed by a surety company or companies acceptable to MIRA. The Performance Letter Of Credit and the Payment Letter Of Credit shall be issued and executed by a Connecticut Bank or by a national banking association acceptable to MIRA.

8. MISCELLANEOUS

8.1 Non-Discrimination

Contractor agrees to the following:

(a) Contractor agrees and warrants that in the performance of the Services for MIRA Contractor will not discriminate or permit discrimination against any person or group of persons on the grounds of race, color, religious creed, age, marital status, national origin, ancestry, sex, sexual orientation, gender identity or expression, intellectual disability, mental disability, or physical disability, including, but not limited to, blindness, unless it is shown by Contractor that such disability prevents performance of the Services involved, in any manner prohibited by the laws of the United States or of the State of Connecticut. Contractor further agrees to take affirmative action to insure that applicants with job related qualifications are employed and that employees are treated when employed without regard to their race, color, religious creed, age, marital status, national origin, ancestry, sex, sexual orientation, gender identity or expression, intellectual disability, mental disability, or physical disability, including,

but not limited to, blindness, unless it is shown by Contractor that such disability prevents performance of the Services involved;

(b) Contractor agrees, in all solicitations or advertisements for employees placed by or on behalf of Contractor, to state that it is an "affirmative action-equal opportunity employer" in accordance with regulations adopted by the Connecticut Commission on Human Rights and Opportunities (The "Commission");

(c) Contractor agrees to provide each labor union or representative of workers with which Contractor has a collective bargaining agreement or other contract or understanding and each vendor with which Contractor has a contract or understanding, a notice to be provided by the Commission, advising the labor union, workers' representative and vendor of Contractor's commitments under Sections 4a-60 and 4a-60a of the *Connecticut General Statutes* and to post copies of the notice in conspicuous places available to employees and applicants for employment;

(d) Contractor agrees to comply with each applicable provision of Sections 4a-60, 4a-60a, 46a-68e, and 46a-68f, inclusive, of the *Connecticut General Statutes* and with each regulation or relevant order issued by the Commission pursuant to Sections 46a-56, 46a-68e, and 46a-68f of the *Connecticut General Statutes*; and

(e) Contractor agrees to provide the Commission with such information requested by the Commission, and permit access to pertinent books, records and accounts concerning the employment practices and procedures of Contractor as related to the applicable provisions of Sections 4a-60, 4a-60a and 46a-56 of the *Connecticut General Statutes*. If this Agreement is a public works contract, Contractor agrees and warrants that it will make good faith efforts to employ minority business enterprises as subcontractors and suppliers of materials in such public works project.

8.2 Entire Agreement

This Agreement constitutes the entire agreement and understanding between the parties hereto and concerning the subject matter hereof, and supersedes any previous agreements, written or oral, between the parties hereto and concerning the subject matter hereof.

8.3 Governing Law

This Agreement shall be governed by, and construed, interpreted and enforced in accordance with the laws of the State of Connecticut as such laws are applied to contracts between Connecticut residents entered into and to be performed entirely in Connecticut.

8.4 Assignment

This Agreement may not be assigned in whole or in part by either party without the prior written consent of the other party or such assignment shall be void.

8.5 No Waiver

Failure to enforce any provision of this Agreement or to require at any time performance of any provision hereof shall not be construed to be a waiver of such provision, or to affect the validity of this Agreement or the right of any party to enforce each and every provision in accordance with the terms hereof. No waiver of any provision of this Agreement shall affect the right of MIRA or Contractor thereafter to enforce such provision or to exercise any right or remedy available to it in the event of any other default involving such provision or any other provision. Making payment or performing pursuant to this Agreement during the existence of a dispute shall not be deemed to be and shall not constitute a waiver of any claims or defenses of the party so paying or performing.

8.6 Modification

This Agreement may not be amended, modified or supplemented except by a writing signed by the parties hereto that specifically refers to this Agreement. Any oral representations or letters by the parties or accommodations shall not create a pattern or practice or course of dealing contrary to the written terms of this Agreement unless this Agreement is formally amended, modified or supplemented.

8.7 Notices

All notices, requests, demands and other communications hereunder shall be in writing and shall be deemed to have been duly given if mailed via certified first class mail return receipt requested postage prepaid or overnight express mail service to the pertinent address below.

(a) If to MIRA:

MATERIALS INNOVATION AND RECYCLING AUTHORITY
100 Constitution Plaza, 6th Floor
Hartford, Connecticut 06103
Attention: David Bodendorf

With a copy to:

MATERIALS INNOVATION AND RECYCLING AUTHORITY
100 Constitution Plaza, 6th Floor
Hartford, Connecticut 06103
Attention: President

(b) If to Contractor:

_____
_____
_____
Attention: _____

8.8 Binding Effect

This Agreement shall inure to the benefit of and be binding upon the heirs, personal representatives, successors and assigns of the parties hereto.

8.9 Severability

MIRA and Contractor hereby understand and agree that if any part, term or provision of this Agreement is held by any court to be invalid, illegal or in conflict with any applicable law, the validity of the remaining portions of this Agreement shall not be affected, and the rights and obligations of the parties shall be construed and enforced as if this Agreement did not contain the particular part, term or provision held to be invalid, illegal or in conflict with any applicable law.

8.10 Whistleblower Protection

If any officer, employee or appointing authority of the Contractor takes or threatens to take any personnel action against any employee of the Contractor in retaliation for such employee's disclosure of information to the Auditors of Public Accounts or the Attorney General under the provisions of *Connecticut General Statutes* Section 4-61dd, the Contractor shall be liable for a civil penalty of not more than five thousand dollars for each offense, up to a maximum of twenty per cent of the value of the contract. Each violation shall be a separate and distinct offense and in the case of a continuing violation each calendar day's continuance of the violation shall be deemed to be a separate and direct offense. The Contractor shall post a notice in a conspicuous place which is readily available for viewing by employees of the provisions of *Connecticut General Statutes* Section 4-61dd relating to large state Contractors.

8.11 Counterparts

This Agreement may be executed in any number of counterparts by the parties hereto. Each such counterpart so executed shall be deemed to be an original and all such executed counterparts shall constitute but one and the same instrument.

8.12 Campaign Contribution And Solicitation Prohibitions

For all State contracts as defined in P.A. 07-1 having a value in a calendar year of $50,000 or more or a combination or series of such agreements or contracts having a value of $100,000 or more, the authorized signatory to this Agreement expressly acknowledges receipt of the State Elections Enforcement Commission's notice advising state contractors of state campaign contribution and solicitation prohibitions, and will inform its principals of the contents of the notice. See **Exhibit H** [SEEC Form 11].

8.13 Affidavit Concerning Nondiscrimination

At the time the Contractor submitted its bid to MIRA, it simultaneously executed a document entitled Affidavit Concerning Nondiscrimination and said document is attached hereto and made a part of this Agreement as **Exhibit I**.

8.14 Affidavit Concerning Consulting Fees

At the time of Contractor's execution of this Agreement, Contractor simultaneously executed a document entitled Affidavit Concerning Consulting Fees and said document is attached hereto and made a part of this Agreement as **Exhibit J**.

8.15 Contractor's Certification Concerning Gifts

At the time of Contractor's execution of this Agreement, Contractor simultaneously executed a document entitled Contractor's Certification Concerning Gifts and said document is attached hereto and made a part of this Agreement as **Exhibit K**.

8.16 President's Certification Concerning Gifts

At the time of the President of MIRA's execution of this Agreement, the President of MIRA simultaneously executed a document entitled President's Certification Concerning Gifts and said document is attached hereto and made a part of this Agreement as **Exhibit L**.

[REMAINDER OF PAGE INTENTIONALLY LEFT BLANK]

[SIGNATURE PAGE FOLLOWS]

IN WITNESS WHEREOF, the parties hereto have set their hands and seals as of the day and year first written above.

MATERIALS INNOVATION AND RECYCLING AUTHORITY

By: _____
Thomas D. Kirk
Its President
Duly Authorized

[NAME OF CONTRACTOR]

By: _____

Its
Duly Authorized

EXHIBIT A: CONSTRUCTION DRAWINGS

Attached hereto and incorporated herein this Exhibit A are the construction drawings (CU-101) as prepared by Fuss & O'Neil.

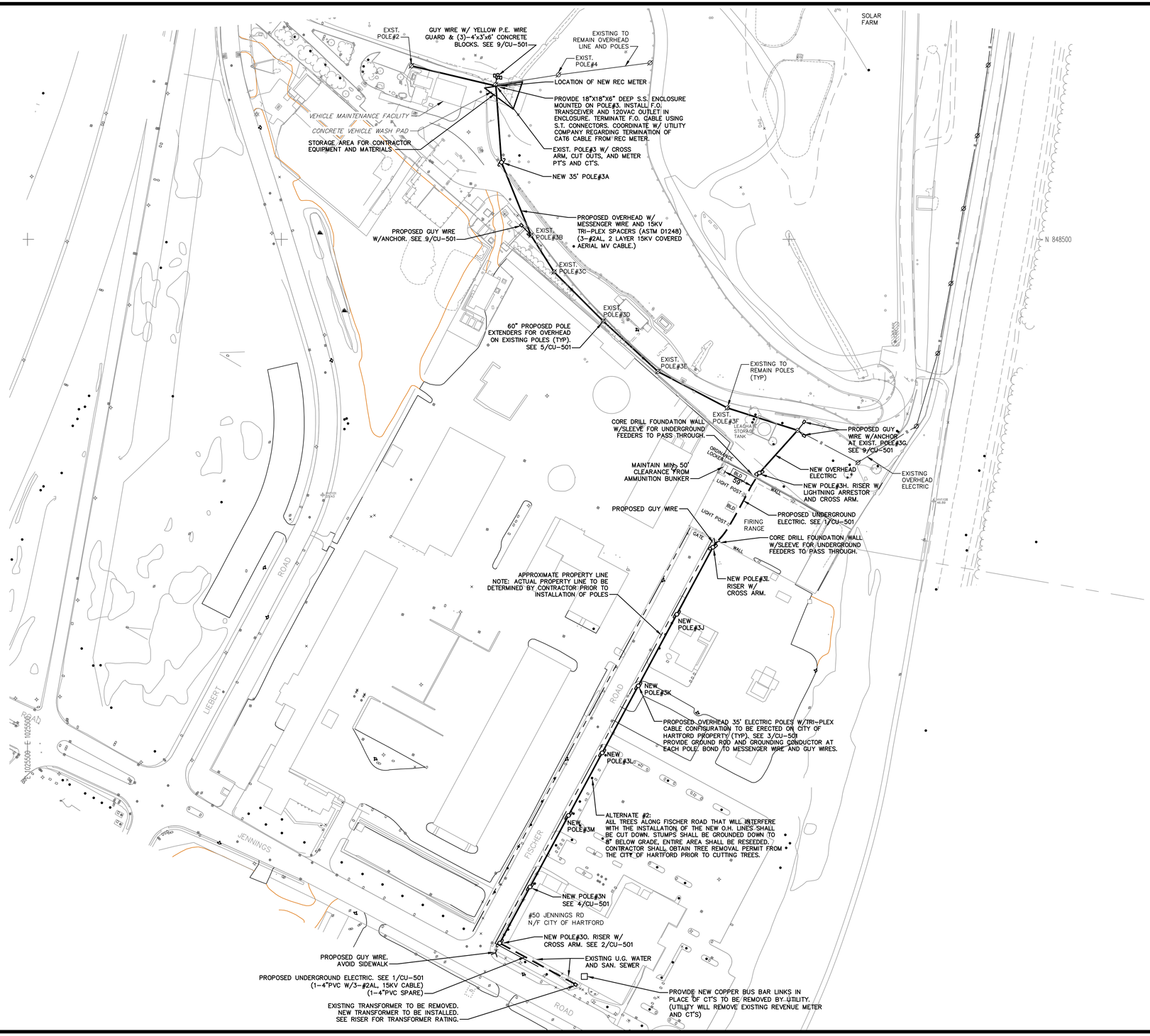

CALL BEFORE YOU DIG

FORTY-EIGHT (48) HOURS PRIOR TO ANY SITE WORK THE CONTRACTOR SHALL CALL "CALL-BEFORE-YOU-DIG" 1-800-922-4455 AND REQUEST THAT ALL UNDERGROUND UTILITIES BE TRACKED. SITE WORK SHALL NOT PROCEED UNLESS ALL UTILITIES ARE CLEARLY MARKED. IF MARKINGS ARE DISTURBED BEFORE SITE WORK IS PERFORMED CONTRACTOR SHALL TAKE EVERY MEASURE NECESSARY TO MAINTAIN INFORMATION CONCERNING LOCATION OF EXISTING UTILITIES TO ENSURE THAT THE UTILITIES ARE NOT DAMAGED.

No.	DATE	DESCRIPTION	DESIGNER	REVIEWER
1.			XX/XX	XX

SEAL

SEAL

SCALE:
HORZ.: 1" = 100'
VERT.:
DATUM:
HORZ.: NAD 83
VERT.: NAVD 88
100 50 0 100
GRAPHIC SCALE

FUSS & O'NEILL
146 HARTFORD ROAD
MANCHESTER, CONNECTICUT 06040
860.646.2469
www.fando.com

MEDIUM VOLTAGE INTERCONNECTION

FROM MIRA PV TO HARTFORD DPW

ELECTRICAL SITE PLAN

LEIBERT AND FISCHER ROAD HARTFORD, CONNECTICUT

PROJ. No.: 20130187.H20
DATE: 06/12/2015

CU-101

J:\DWG\P2013\0187\H20\MEP\Civil Utilities\20130187H20_CU101.dwg, CU101, 6/29/2015 2:27:26 PM

NOTES:

(A) 4" O.D. X 48" TALL BOLLARD (TYPICAL OF 4). SEE 6/CU-501.

(B) REINFORCED CONCRETE SLAB WITH SERVICE ENCLOSURE. SEE 5/CU-102.

(C) UG (1-2" PVC) AND (1-1" PVC) CONDUITS W/ POWER AND COMMUNICATION CABLE.

(D) UG (1-1" PVC) CONDUIT W/ TELEPHONE SERVICE.

(E) UG (2-1" PVC) CONDUITS W/ 120VAC POWER AND COMMUNICATION CABLES.

(F) OH CABLES. 120 VAC POWER (2- ALUMINUM CONDUCTORS ASTM B-232, 600 VAC, BARE MESSENGER WIRES, RUN SECONDARY "GAIN" HEIGHT) AND OH F.O. (4 STRAND MULTI-MODE CABLE W/ STEEL MESSENGER WIRE AND ST CONNECTORS, RUN AT TELECOM "GAIN" HEIGHT).

(G) LOCATION OF EXISTING DRAKER COMMUNICATION CABINET.

(H) 2- 2" PVC SPARE CONDUITS. STUB AND CAP 5" FROM PAD.

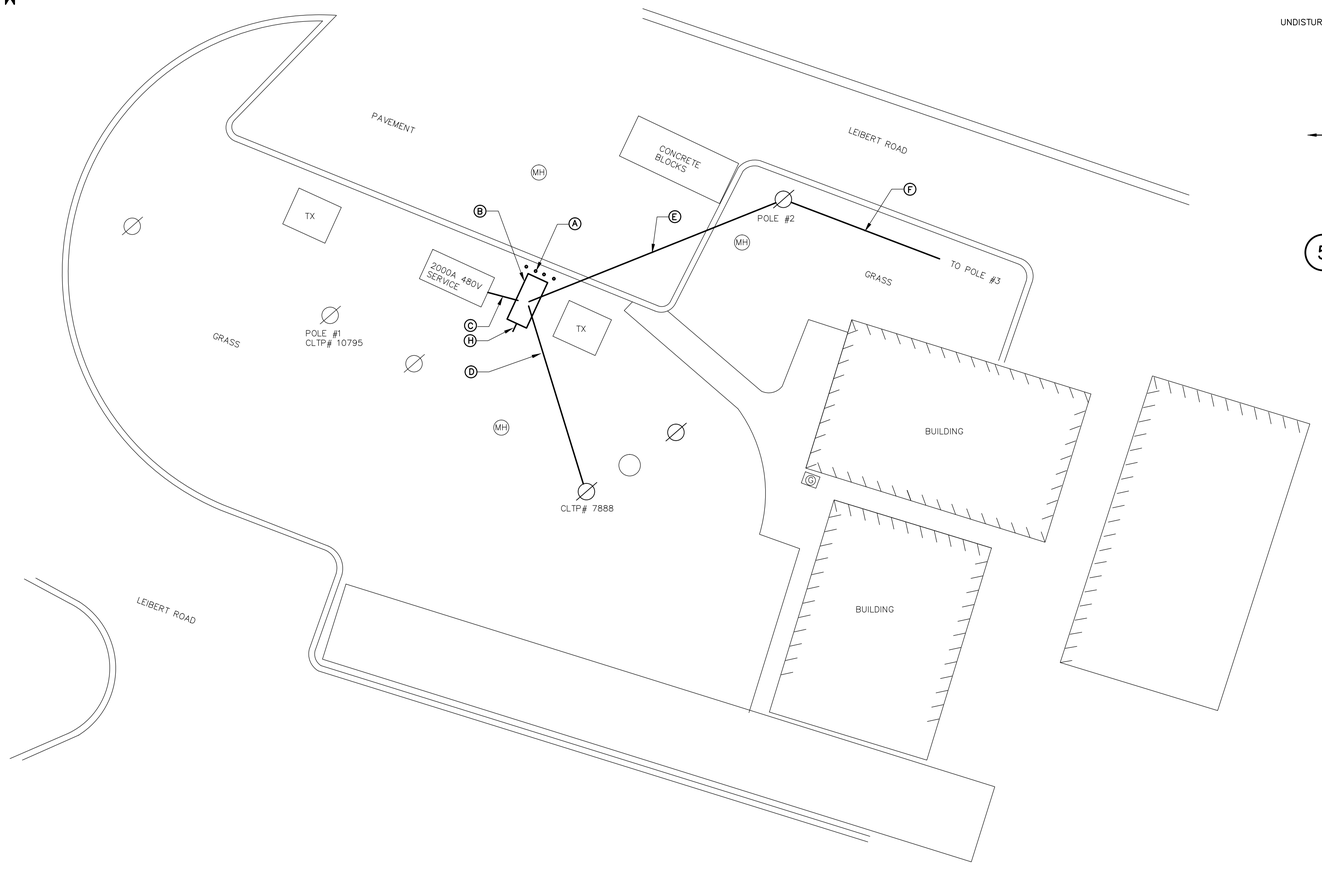

1 PARTIAL SITE PLAN

SCALE: 1" = 10'

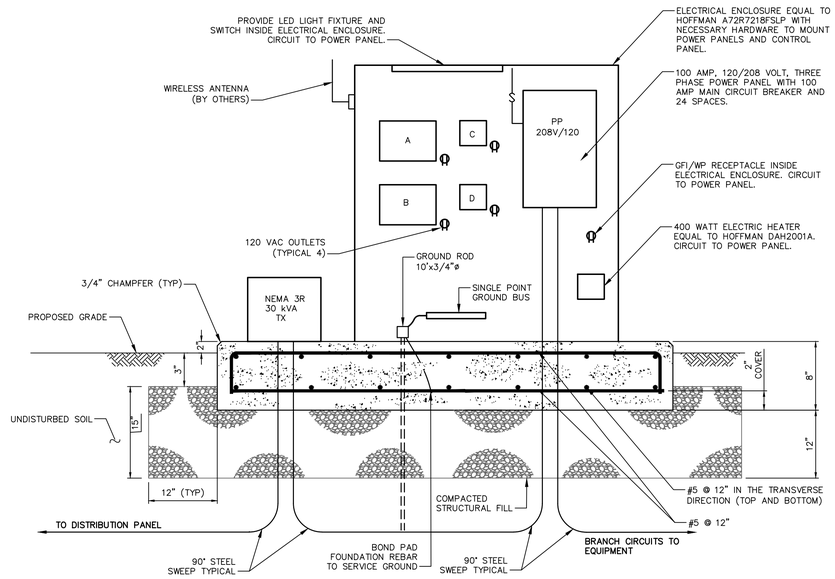

NOTES:

1. CONCRETE SHALL BE 4,000 PSI CONCRETE.
2. CONCRETE SHALL BE CURED FOR 7 DAYS PRIOR TO BACKFILL.
3. ALL REINFORCING BARS SHALL BE ASTM A 615, GRADE 60 BARS WITH 2" COVER UNLESS NOTED OTHERWISE.
4. ALL EXPOSED EDGES SHALL BE BEVELED ¾" x ¾" UNLESS DIMENSIONED OTHERWISE.
5. CONSTRUCTION JOINTS WILL NOT BE PERMITTED WITHOUT PRIOR APPROVAL OF THE ENGINEER.
6. COMPACTED STRUCTURAL FILL SHALL BE DEPOSITED AND COMPACTED IN 6" LIFTS.
7. LENGTH AND WIDTH OF PAD SHALL BE 12" PER SIDE GREATER THAN EQUIPMENT TO BE MOUNTED ON PAD.

A. DRAKER

B. ROUTER (BY OTHERS)

C. FIBER OPTIC TRANSCEIVER

D. WIRELESS MODEM (BY OTHERS)

5 SERVICE ENCLOSURE

SCALE: N.T.S.

SCHEDULE FOR POWER PANEL LOCATED IN ELECTRICAL ENCLOSURE

	Panel Designation:	PP-1		Frame Size:	100 A		Volts:	120/208	
	Mounting:	Surface		MLO/MCB (Amps):	100 A MCB		Phase:	Three	
	TVSS Type:	4		A.I.C.:	10KAIC		Wire:	#3 AWG	
CKT	DESCRIPTION	VA	VOLTS	PH	WIRE	CONDUIT	AMPS	POLES	REMARKS
1	Cabinet Light and heater	500	120	1	#12 AWG	3/4" EMT	20	1	
2	Cabinet Receptacle	180	120	1	#12 AWG	3/4" EMT	20	1	
3	Draker	500	120	1	#12 AWG	3/4" EMT	20	1	
4	Router	500	120	1	#12 AWG	3/4" EMT	20	1	
5	Transceiver	500	120	1	#12 AWG	3/4" EMT	20	1	
6	REC Meter	500	120	1	#12 AWG	3/4" EMT	20	1	
7	TVSS		208	3	#10 AWG	3/4" EMT	30	3	
8	Spare Circuit Breakers						20	4	4 - single pole c/b's
9	Spare Space							11	
10	Wireless Modem	500	120	1	#12 AWG	3/4" EMT	20	1	

4 PANELBOARD SCHEDULE

SCALE: N.T.S.

No.	DATE	DESCRIPTION	DESIGNER	REVIEWER
1.			XX/XX	XX

SEAL

SEAL

SCALE:
HORZ.: AS SHOWN
VERT.:
DATUM:
HORZ.: NAD 83
VERT.: NAVD 88
0
GRAPHIC SCALE

FUSS & O'NEILL
146 HARTFORD ROAD
MANCHESTER, CONNECTICUT 06040
860.646.2469
www.fando.com

MEDIUM VOLTAGE INTERCONNECTION

FROM MIRA PV TO HARTFORD DPW

PARTIAL SITE PLAN, SCHEDULE AND DETAIL

LEIBERT AND FISCHER ROAD HARTFORD, CONNECTICUT

PROJ. No.: 20130187.H20
DATE: 06/12/2015

CU-102

J:\DWG\P2013\0187H20\MEP\Civil Utilities\20130187H20_CU101.dwg, CU102, 6/18/2015 1:54:35 PM

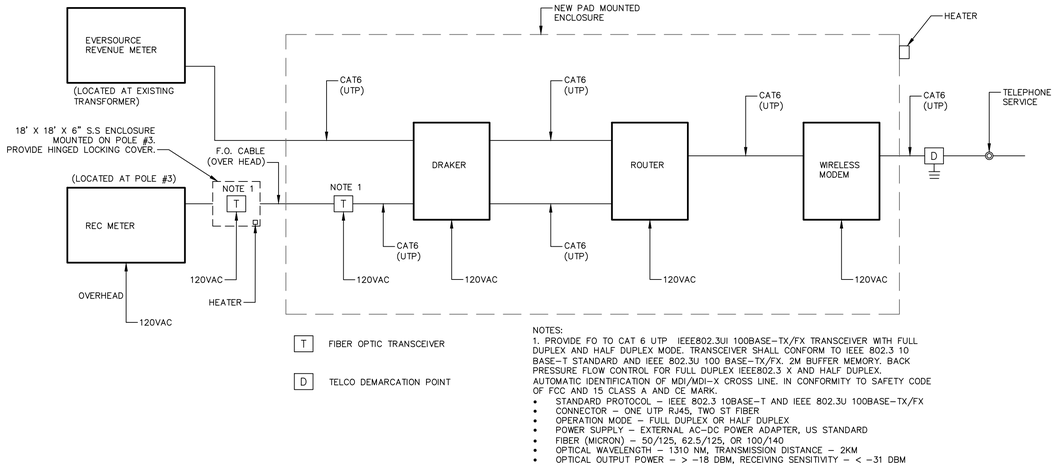

2 COMMUNICATION RISER
SCALE: N.T.S.

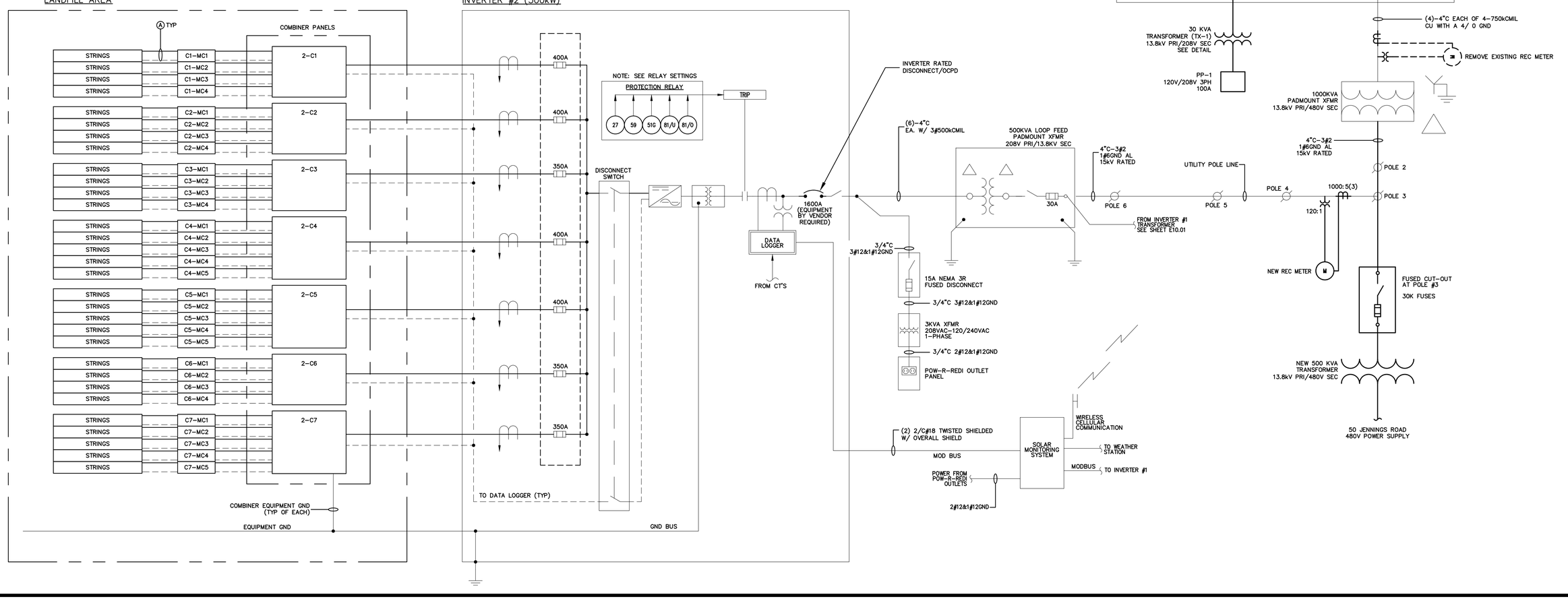

No.	DATE	DESCRIPTION	DESIGNER	REVIEWER
1.			XX/XX	XX

SEAL

SEAL

SCALE:
HORZ.: NOT TO SCALE
VERT.:
DATUM:
HORZ.:
VERT.:
0
GRAPHIC SCALE

FUSS & O'NEILL
146 HARTFORD ROAD
MANCHESTER, CONNECTICUT 06040
860.646.2469
www.fando.com

MEDIUM VOLTAGE INTERCONNECTION

FROM MIRA PV TO HARTFORD DPW

ELECTRICAL ONE LINE DIAGRAM

LEIBERT AND FISCHER ROAD HARTFORD, CONNECTICUT

PROJ. No.: 20130187.H20
DATE: 06/12/2015

E-101

J:\DWG\P2013\0187\H20\MEP\Electrical\20130187.H20_ONE LINE.dwg, E-101, 6/18/2015 1:56:15 PM

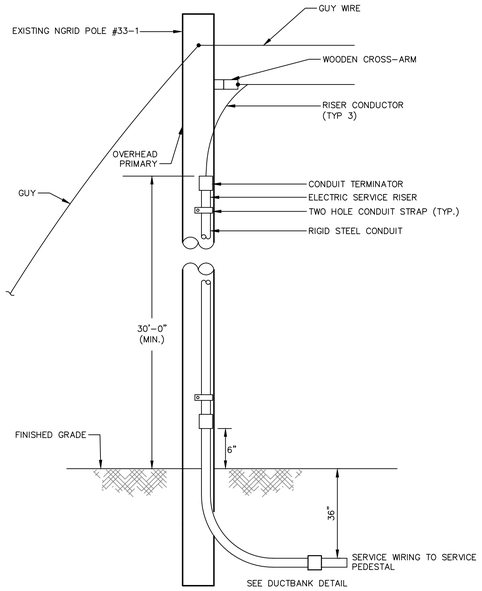

2 ELECTRIC SERVICE RISER POLE DETAIL

SCALE: N.T.S.

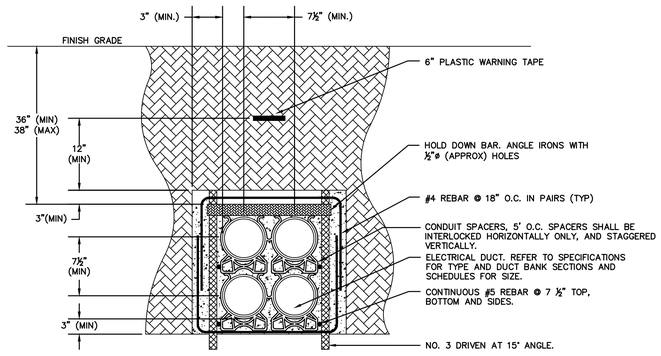

NOTES

1. DUCT BANK DETAIL SHOWS A TYPICAL 4-CONDUIT DUCTBANK. REFER TO CONDUIT SPACING DETAILS FOR EXACT CONDUIT NUMBERS AND CONFIGURATION WITHIN THE CONCRETE AND TRENCH.
2. DUCT BANK SHALL BE ENCASED IN CONCRETE WITH AT LEAST 4" OF CONCRETE AT THE TOP, BOTTOM AND SIDES.
3. THE CONCRETE SHALL INCLUDE 3/4" AGGREGATE WITH A NOMINAL COMPRESSIVE STRENGTH OF 3,000 LBS. PER SQUARE INCH. THE SLUMP SHALL BE AT THE UPPER END OF THE RANGE, 5 – 6" INCHES. SLUMP SHALL BE JUST ENOUGH TO FLOW TO THE BOTTOM OF THE DUCT BANK YET NOT BE SO WET AS TO CAUSE THE CONDUITS TO FLOAT EXCESSIVELY.
4. ADJUST THE CONCRETE DELIVERY CHUTE SO THE FALL INTO THE FORM IS MINIMAL. POUR THE CONCRETE SLOWLY AND DISTRIBUTE IT EVENLY SO AS NOT TO DISLODGE THE SPACERS.
5. FOUR SETS OF REBAR STAKES AND HOLD DOWN BARS ARE REQUIRED PER 20' OF DUCT BANK. THE 3" EXTENSION OF THE REBAR ABOVE THE CONDUITS IS TO BE USED AS A GUIDE FOR CONCRETE DEPTH ON TOP.
6. PROVIDE FORMS FOR CONCRETE POUR. DO NOT USE THE SIDES OF THE TRENCH.
7. BACKFILL TRENCH AFTER CONCRETE HAS SET, AND INSPECTION MADE BY ENGINEER.
8. STEEL REINFORCING RODS SHALL BE INTERFACED WITH EQUIPMENT PADS AND MANHOLES, TO REDUCE SHEAR.
9. CONCRETE CONSTRUCTION JOINTS SHALL NOT BE SPACED LESS THAN 40' O.C.

1 DUCTBANK DETAIL

SCALE: N.T.S.

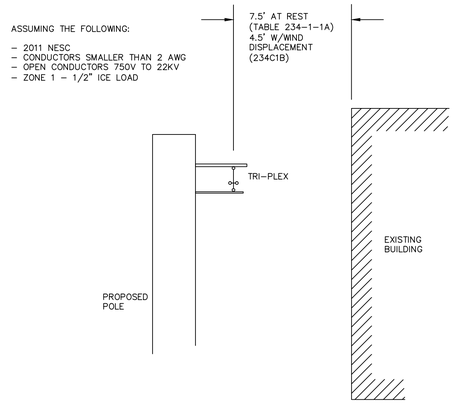

4 BUILDING/POLE SEPARATION DETAIL

SCALE: N.T.S.

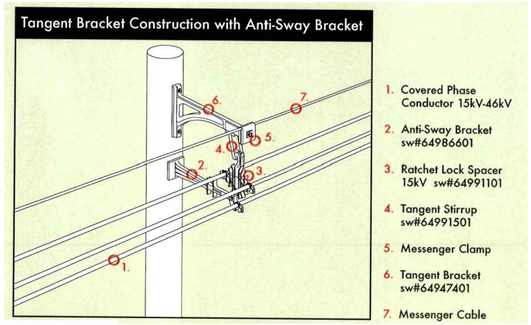

3 TRI-PLEX CONSTRUCTION

SCALE: N.T.S.

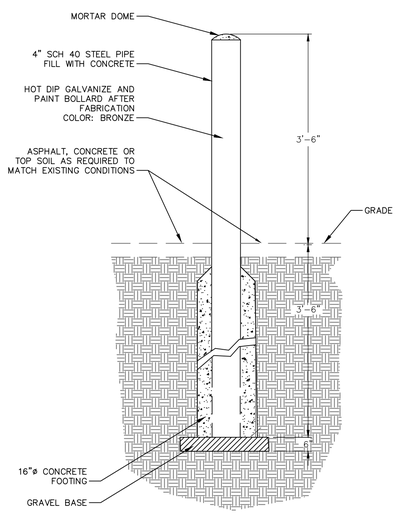

6 BOLLARD

SCALE: N.T.S.

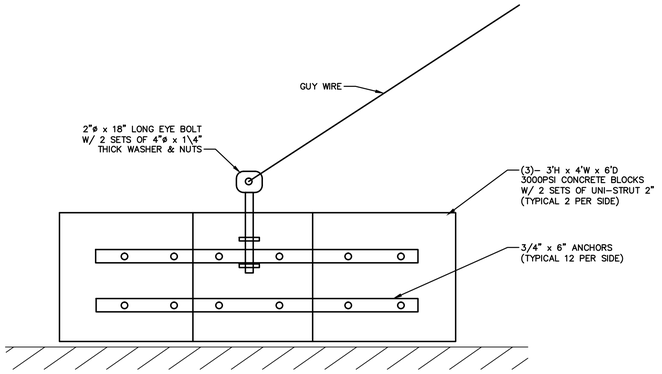

NOTE: OWNER WILL PROVIDE BLOCKS. CONTRACTOR TO PROVIDE CABLE CONNECTORS AND UNI-STRUT BRACKETS.

9 GUY ANCHOR DETAIL

SCALE: N.T.S.

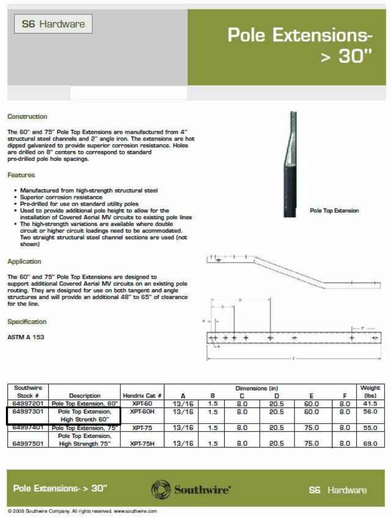

5 POLE EXTENDER

SCALE: N.T.S.

No.	DATE	DESCRIPTION	DESIGNER	REVIEWER
1.			XX/XX	XX

SEAL

SEAL

SCALE:
HORZ.: AS SHOWN
VERT.:
DATUM:
HORZ.:
VERT.:
0
GRAPHIC SCALE

FUSS & O'NEILL
146 HARTFORD ROAD
MANCHESTER, CONNECTICUT 06040
860.646.2469
www.fando.com

MEDIUM VOLTAGE INTERCONNECTION

FROM MIRA PV TO HARTFORD DPW

SITE DETAILS

LEIBERT AND FISCHER ROAD HARTFORD, CONNECTICUT

PROJ. No.: 20130187.H20
DATE: 06/12/2015

CU-501

J:\DWG\P\2013\0187\H20\MEP\Civil Utilities\20130187H20_CU101.dwg, CU501, 6/18/2015 1:54:05 PM

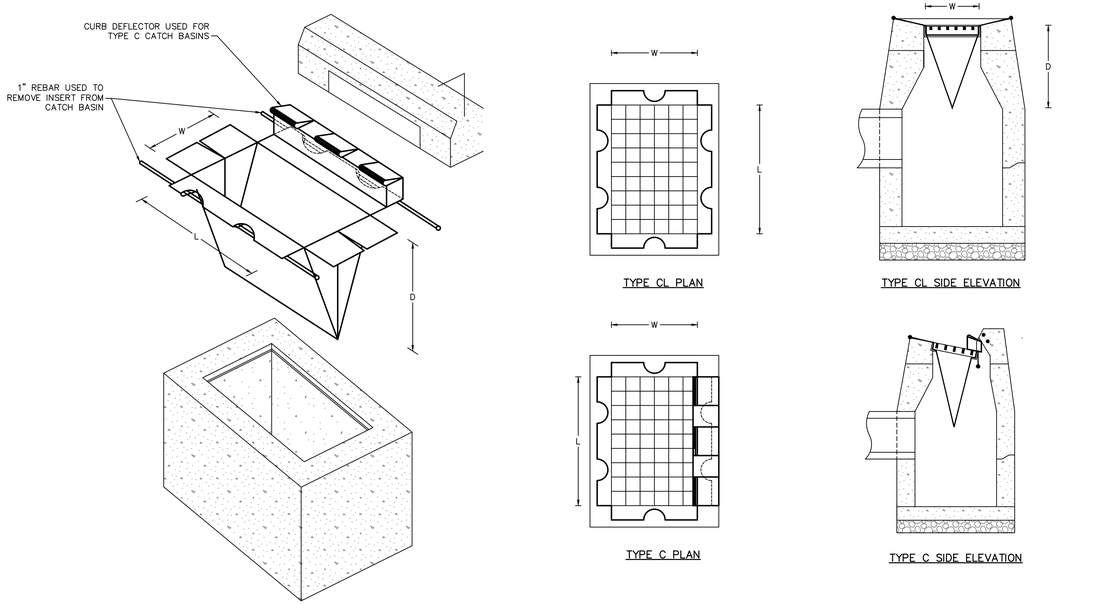

1 CATCH BASIN INSERT

SCALE: N.T.S.

5 BITUMINOUS CONCRETE CURB

SCALE: N.T.S.

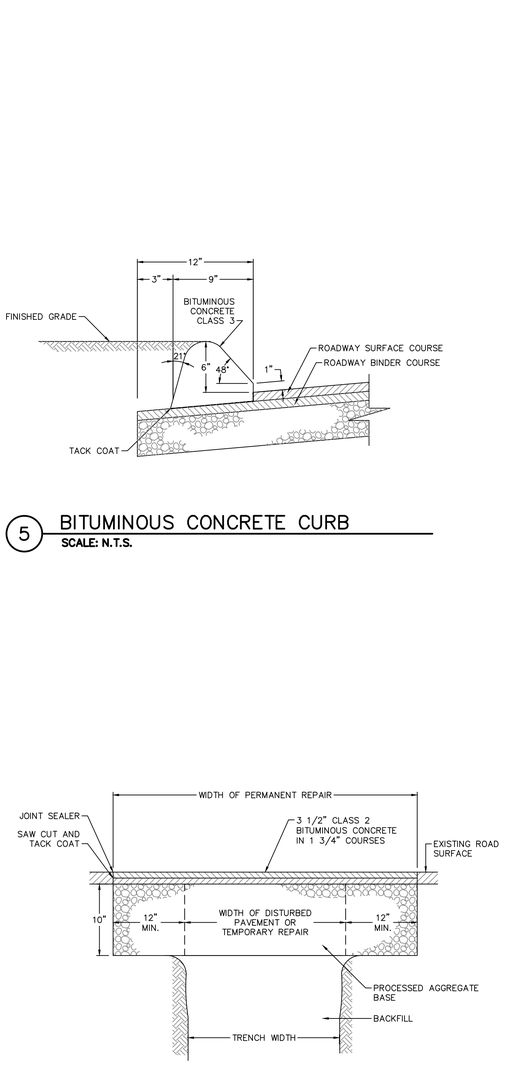

4 PERMANENT PAVEMENT REPAIR

SCALE: N.T.S.

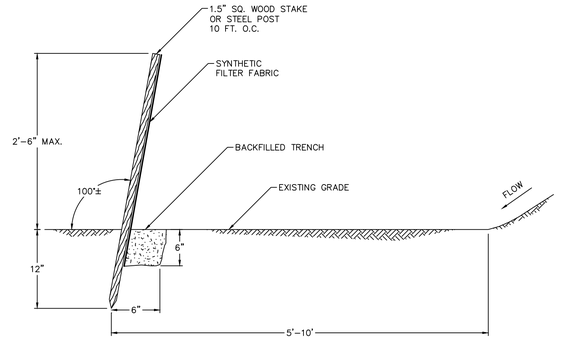

8 SILT FENCE

SCALE: N.T.S.

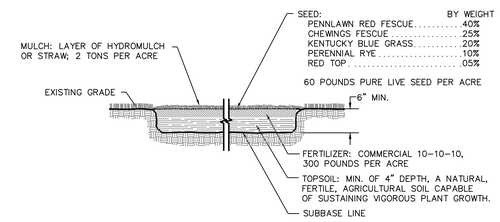

7 TOPSOIL, FERTILIZER, SEED & MULCH

SCALE: N.T.S.

No.	DATE	DESCRIPTION	DESIGNER	REVIEWER
1.			XX/XX	XX

SEAL

SEAL

SCALE:
HORZ.: AS SHOWN
VERT.:
DATUM:
HORZ.:
VERT.:
0
GRAPHIC SCALE

FUSS & O'NEILL
146 HARTFORD ROAD
MANCHESTER, CONNECTICUT 06040
860.646.2469
www.fando.com

MEDIUM VOLTAGE INTERCONNECTION

FROM MIRA PV TO HARTFORD DPW

SITE DETAILS

LEIBERT AND FISCHER ROAD HARTFORD, CONNECTICUT

PROJ. No.: 20130187.H20
DATE: 06/12/2015

CU-502

I:\DWG\P2013\0187\H20\MEP\Civil Utilities\20130187H20_CU101.dwg, CU502, 6/18/2015 1:53:26 PM

EXHIBIT B
GENERAL REQUIREMENTS
TABLE OF CONTENTS

Sec. #	Section Name	Page #
01000	WORK COVERED BY CONTRACT DOCUMENTS	2
01001	OWNER AND REGULATORY AUTHORITY	2
01002	ENGINEER	2
01010	SUMMARY OF WORK	3
01012	PAY ITEMS	7
01015	OCCUPANCY REQUIREMENTS	8
01019	CONTRACT CONSIDERATIONS	8
01027	APPLICATION FOR PAYMENT	8
01035	MODIFICATION PROCEDURES	11
01040	COORDINATION	13
01045	CUTTING AND PATCHING	14
01050	FIELD ENGINEERING	15
01095	REFERENCE STANDARDS & DEFINITIONS	17
01120	RENOVATION/DEMOLITION PROJECT PROCEDURES	17
01200	PROJECT MEETINGS	18
01300	SUBMITTALS	20
01310	CONSTRUCTION SCHEDULE	27
01400	QUALITY CONTROL	28
01505	TEMPORARY ELECTRICITY AND LIGHTING	31
01515	TEMPORARY TELEPHONE	31
01520	TEMPORARY WATER	31
01525	TEMPORARY SANITARY FACILITIES	31
01530	FIRE PROTECTION	31
01535	CONSTRUCTION EQUIPMENT	31
01540	BARRIERS AND ENCLOSURES	31
01545	PROTECTION	32
01550	SECURITY	32
01555	TRAFFIC WAYS	32
01570	CLEANING	33
01575	PROJECT SIGNS	34
01580	FIELD OFFICES AND SHEDS ~	34
01600	MATERIALS AND EQUIPMENT CONTROLS	34
01631	EQUALS AND SUBSTITUTIONS	34
01650	STARTING OF SYSTEMS	37
01700	CONTRACT CLOSEOUT	38
01730	OPERATION AND MAINTENANCE DATA	42
01740	WARRANTIES AND GUARANTEES	43

01000 WORK COVERED BY CONTRACT DOCUMENTS

A. Project Title

The project is entitled MEDIUM VOLTAGE INTERCONNECTION FROM MIRA PV TO HARTFORD DPW". The project is located in Hartford, Connecticut. It is to be completed and ready for use by the Owner within the Contract Time specified in Exhibit D of the Contract Documents.

B. The Project Description

1. The project includes the following work items:
    a. Installation of pole extension on existing poles
    b. Installation of new poles
    c. Installation of Triplex transmission lines
    d. Installation of Concrete ductbank for underground cabling
    e. Removal of excavated materials
    f. Removal of select trees along proposed transmission route
    g. Removal of the existing REC meter
    h. Installation of 500kva pad mounted transformer on existing pad
    i. Coordination with Eversource for REC Metering
    j. Coordination with Eversource for DPW revenue meter and transformer removal
    k. Coordination with MIRA, CTDEEP, and the City of Hartford for construction and planned power outages.
    l. Installation of exterior enclosure, power panel and communication equipment
    m. Connection of Hartford DPW service to new pad mounted transformer

01001 OWNER AND REGULATORY AUTHORITY

A. Owner

The Owner is the Materials Innovation and Recycling Authority (MIRA).

1. MIRA has the administrative authority for the facility and site where the work is being performed. The authorized representative for MIRA acts in matters involving revoking, altering, enlarging or relaxing any requirement of the contract documents.
2. The Owner's Representative is David Bodendorf, Senior Environmental Environmental Engineer. The Owner's Representative is located at 100 Constitution Plaza, 6th Floor, Hartford, CT 06103. Phone 860-757-7721; email dbodendorf@ctmira.org.

B. Property Owner

The current property owner is the City of Hartford. The City of Hartford has no authority over the work being performed under this contract.

01002 ENGINEER

A. The Engineer

1. Engineer Identification: The Drawings and Technical Specifications, dated 2015, were prepared for the Project by Fuss & O'Neill, Inc. 146 Hartford Road, Manchester, CT 06040.

2. The Engineer or their accredited representative is referred to in the Contract Documents as "Engineer" or "Engineers" or by pronouns which imply them. As information for the Contractor, the Engineer's status is defined as follows:

    a. The Engineer will not make interpretations or decisions directly to the Contractor.

    b. As the authorized agent of MIRA, the Engineer is responsible for review of shop drawings, materials, and equipment intended for the work, in accordance with the "General Conditions", and the "Supplementary Conditions".

3. As information to the Contractor, the Engineer's status is defined as follows:

    a. The Engineer is the Owner's Agent who will, among other things, monitor the General Contractor's performance, scheduling and construction, process shop drawings, material, and equipment submittals, review and process periodic billings, review and recommend cost changes.

    b. The Engineer will process all requests for information, interpretations and decisions regarding the meaning and intent of the Contract Documents, consulting with appropriate parties prior to rendering the interpretations or decisions to the Contractor. All such requests and replies shall be in writing.

4. Limitations on Engineer's Authority and Responsibilities.

    a. Engineer will not supervise, direct, control, or have authority over or be responsible for Contractor's means, methods, techniques, sequences, or procedures of construction, or the safety precautions and programs incident thereto, or for any failure of Contractor to comply with Laws and Regulations applicable to the performance of the Work. Engineer will not be responsible for Contractor's failure to perform the Work in accordance with the Contract Documents.

    b. Engineer will not be responsible for the acts or omissions of Contractor or of any Subcontractor, any Supplier, or of any other individual or entity performing any of the Work.

    c. Engineer shall not authorize any deviation from the Contract Documents or substitution of materials or equipment, unless authorized by the Owner.

    d. Engineer shall not undertake any of the responsibilities of Contractor, subcontractors or Contractor's superintendent.

    e. Engineer shall not advise on, issue directions relative to or assume control over any aspect of the means, methods, techniques, sequences or procedures of construction unless such advice or directions are specifically required by the Contract Documents.

    f. Engineer shall not advise on, issue directions regarding or assume control over safety precautions and programs in connection with the Work.

    g. Engineer shall not accept Shop Drawing or Sample submittals from anyone other than Contractor.

    h. Engineer shall not participate in specialized field or laboratory tests or inspections conducted by others except as specifically authorized by the Engineer or Owner.

01010 SUMMARY OF WORK

A. Part 1 – General

1. Related Documents

    a. Contract Documents and general provisions of the Contract, including the Agreement and all Exhibits, apply to this Section.

2. Site Conditions

a. Work is to be performed on municipal property, a portion of which is a solid waste landfill. Landfill gases, including methane, may be present in potentially combustible concentrations. Leachate may be generated by the landfill during the course of the Work.

1. Take necessary precautions to protect and ensure the health and safety of employees, agents, subcontractors, suppliers, including employees of the Owner and Engineer during the performance of the Work.

2. Prohibit the use of open flames, sparks, smoking or other activity which may ignite methane gas at the site.

b. The underground utilities and structures at the site have been located primarily from information furnished by others and the locations as depicted on the Drawings are considered approximate as to size and location. There may be additional underground utilities and structures that are not shown on the Drawings. Locate all existing utilities and structures and protect same from damage or harm. Restore utilities interfered with or damaged, at the expense of the CONTRACTOR, and to the satisfaction of its Owner.

c. Ensure that construction activities do not impact the activities or properties of the City of Hartford or the Owner and its agents without prior coordination and consent of these entities. **Contractor shall be aware of an ordinance storage bunker maintained by the City of Hartford Police Department in the vicinity of the work. All work and facilities to be installed under this contract shall maintain a minimum setback to the bunker of 50 feet**.

d. Immediately notify the Engineer upon encountering archaeological material, including "charcoal," "bone," "shell," "cultural objects" (e.g., fire cracked stones/stone flaking material), "middens," or any other artifacts or related items of historical significance.

e. Contractor shall properly dispose of any excavated or earthen materials that are generated as part of the project.

3. Work Covered By Contract Documents

a. The Project is entitled, "MEDIUM VOLTAGE INTERCONNECTION FROM MIRA PV TO HARTFORD DPW". The work involves mobilization and establishing temporary facilities, location and protection of underground and overhead utilities, location and establishment of existing rights-of-way in the project area to avoid installation of any portion of the project within a public right-of-way, preparation of the site, earthwork, installation of several utility poles and pole extensions, installation of underground electrical conduit in concrete duct bank, excavation and removal of materials, removal of trees, installation of medium voltage electric wire including triplex transmission lines, installation of a new pad mounted weatherproof equipment cabinet including power panel and communication equipment, installation of a new 500kva pad mounted transformer, removal of existing REC meter, coordination with MIRA, CTDEEP, Eversource, and the City of Hartford, applying for and obtaining all permits, and all work necessary to connect the existing Solar EGF at the Hartford Landfill to 50 Jennings Road.

b. The CONTRACTOR shall include in its proposal, all items required in order to carry out the intent of the Work as described, shown, and implied in the Contract Documents.

c. It shall be the CONTRACTOR's responsibility upon discovery to immediately notify MIRA in writing, of errors, omissions, discrepancies, and instances of non-compliance with applicable codes and regulations within the documents. Any additional costs arising from the CONTRACTOR's failure to provide such notification shall be borne by the CONTRACTOR.

d. The CONTRACTOR shall comply with terms of the Eversource's Interconnection Guidelines and is responsible to apply for, pay for, and obtain any state and local permits required to complete the work.

4. Work Sequence

   a. The CONTRACTOR shall mobilize all equipment, labor, tools, materials, and incidentals to the site. Temporary facilities shall include a sanitary facilities, and materials, and equipment storage area as shown on the Contract Drawings. The CONTRACTOR shall demobilize following the completion of work and shall restore all storage areas to their condition prior to commencing work.

   b. Prior to initiating any construction, the CONTRACTOR shall establish the location of the Fischer Road right-of-way, the Hartford Police Department ordinance bunker, and all subsurface utilities in the vicinity of the work, including the MDC water main in the vicinity of proposed pole 3A.

   c. The CONTRACTOR shall prepare the site for construction by installing sediment and erosion controls as shown on the Contract Drawings prior to performing any work involving the removal of temporary cover materials or regrading.

   d. The CONTRACTOR shall manage surface runoff from the work areas in accordance with best management practices that prevent erosion of soil from disturbed areas and stockpiles.

   e. The CONTRACTOR shall provide a complete set of contract drawings neatly marked-up to show the location of the facilities as constructed.

5. Miscellaneous Provisions

   a. Examination of the Site:

      1. It is not the intent of the Contract Documents to show all existing conditions. All contractors are required to attend the Pre-Proposal Conference prior to submitting their Proposal. This is the only opportunity to visit and examine the site with MIRA.

      2. CONTRACTORs should investigate and satisfy themselves as to the conditions affecting the work, including but not restricted to those bearing upon transportation, handling, and storage of materials, availability of labor, water, electric power, uncertainties of weather, roads or similar physical conditions of the ground, and facilities needed preliminary to and during the prosecution of the Work. Any failure by the CONTRACTOR to acquaint itself with the available information shall not relieve him from the responsibility for estimating properly the difficulty and cost of successfully performing the Work.

6. Contractor Use Of Premises

   a. General: The CONTRACTOR shall have full access to the Work Area. Access to other areas immediately surrounding the Work Area shall be prohibited unless prior approval is received from MIRA.

   b. Use of the Site: Limit use of the premises to work in areas indicated. Confine operations to areas within contract limits indicated. Do not disturb portions of the site beyond the areas in which the Work is indicated.

      1. The CONTRACTOR shall confine its operations, including storage or materials, supplies, equipment, and incidentals to the areas specified in the Contract Documents.

      2. Existing access roads, drives, walks, and parking areas are to be kept free and clear at all times. Contractor shall be given a key to the landfill property and the performance of work shall be confined to the hours of 7am to 5pm Monday through Friday unless otherwise approved or directed by MIRA. CONTRACTOR is to check all roadways for accessibility and clearances for deliveries of all large material and equipment. Only designated areas shall be used for parking and storage of materials. Schedule deliv-

eries to minimize space and time requirements for storage of materials and equipment on-site.

3. CONTRACTOR shall not impact the operation of the City of Hartford Transfer Station, the Police Firing Range, or other activities occurring at the site.

4. CONTRACTOR shall provide 5 days written notice of any power interruption activities.

5. The CONTRACTOR shall be responsible for keeping the work area clean and shall pick up rubbish and debris generated by the CONTRACTOR and promptly remove from the site.

6. CONTRACTOR's daily access to the site shall be as indicated on the Contract Documents. Parking for the CONTRACTOR's employees shall be limited to an area designated by MIRA and the CONTRACTOR may be required to provide identification stickers for all vehicles.

7. Special precautions shall be taken to protect all drainage systems near the Work Area. Prevent any and all sediment, debris, or other materials from getting into these systems. Should any sediment, debris, or other materials get into these systems or if any damage occurs to them, the CONTRACTOR shall immediately contact MIRA. The CONTRACTOR shall be fully responsible for all costs associated with additional cleaning and repairs caused by neglecting to protect the drainage systems.

8. No signs, other than those approved by MIRA, shall be visible on the premises.

9. CONTRACTOR shall coordinate with the Hartford Police Department when performing work near and across the police firing range. The point of Contact for the Hartford PD is:

   Dustin Rendock, Deputy Chief
   253 High Street
   Hartford, CT 06103
   Phone: 860-757-4000
   Email: rendd001@hartford.gov

7. Call Before You Dig

   a. The Contractor shall be responsible for complying with all applicable Call Before You Dig Rules.

   b. Contact Call Before You Dig at 1-800-922-4455 at least 2 working days prior to the start of construction (excluding weekends and holidays), to mark out the utility locations.

8. Safety

   a. Comply with requirements of the most recent version of the Occupational Safety and Health Act (OSHA.)

   b. When any support system is used that requires design by an engineer, copies of the design stamped by an engineer shall be submitted to the ENGINEER and OWNER.

   c. The Contractor has full responsibility to comply with all provisions of State of Connecticut Public General Statutes, Title 31, Chapter 571 concerning Occupational Safety and Health. Any fines levied against for violations shall be the Contractor's responsibility.

B. Part 2 – Products

None

C. Part 3 - Execution

None

01012 PAY ITEMS

A. Part 1 - General

1. Summary

A. This Section includes measurement and payment paragraphs for

1. Proposal payment items (lump sum and unit price).

2. Definitions

A. **Approximate Quantities:** Any estimated quantities are provided for Contractor's information only. No guarantees are made as to the quantities of the listed elements.

1. No changes to the Contract Price will be made due to differences between the listed approximate quantities and actual quantities required to complete the Work for Lump Sum Payment Items. Unit Price Pay Items will be Paid based on the actual number of units complete and in-place.

B. **Pay Items**: The proposal of a Proposer submitted on the prescribed form setting forth the prices for the Work to be performed.

1. **Base Proposal:** Lump Sum - Includes all costs to construct electrical interconnection including but not limited to mobilization and demobilization, as described in the Contract Documents, with the exception of work accounted for in Allowance 1 described below.

2. **Allowance 1** Lump Sum: Utility Company (Eversource) will perform the following construction operations at Project site as part of the contract. Those operations will be conducted simultaneously with work under this Contract and coordinated by contractor.

   Removal of Hartford DPW pad mounted transformer and utility metering

   Installation of new REC Meter

   Include the sum of $14,000 for charges from Eversource for removal of the transformer and the installation of REC Meter. Allowance includes all labor, materials and coordination by Contractor, as well as 10% Contractor overhead and profit for complete operation of REC Meter. The actual price paid for this item will be Contractor's actual cost from Eversource plus 10%.

   Allowance 2 Lump Sum: Include the sum of $4,000 for the cost to stockpile, chemically analyze, transport, and dispose of excavated materials and to stockpile, transport and dispose of excavated pavement. The cost to load such materials and pavement materials shall be carried in the Base Proposal cost. The actual price paid for this item will be Contractor's actual cost to chemically analyze, transport, and dispose of excavated materials and pavement materials plus 10%.

3. **Alternate 1** Lump Sum - Include either an add or a deduct for Cross arms instead Tri-plex overhead from pole # 3A to 3K.

4. **Alternate 2** Lump Sum – Include cost of tree and stump removal along route of overhead transmission lines adjacent to Fischer Road. Cost shall include restoration of the areas where trees and stumps are removed.

01015 OCCUPANCY REQUIREMENTS

A. Full Owner, CTDEEP, and City of Hartford Occupancy During Construction

The Owner will occupy the site during the entire construction period. Cooperate with the Owner the CTDEEP, and City of Hartford during construction operations to minimize conflicts and facilitate Owner, CTDEEP, and City usage. Perform the Work so as not to interfere with the operations of any of the above listed parties.

01019 CONTRACT CONSIDERATIONS

A. Allowances

1. Allowance for work by Eversource described in Section 01012.

B. Measurement and Payment - General

1. Lump Sum Items refer to and are the same pay items listed in the Proposal Price Form. They constitute all of the pay items for the completion of the Work. No direct or separate payment will be made for providing miscellaneous temporary or accessory works, plant, services, Contractor's or Contractor's field offices, layout surveys, job signs, sanitary requirements, testing, safety devices, approval and record drawings, water supplies, power, maintaining traffic, removal of waste, watchmen, bonds, insurance, and all other requirements of the General Conditions and Supplementary Conditions. Compensation for all such services, things and materials shall be included in the prices stipulated for the lump sum and unit price pay items listed on the Proposal Price Form.
2. Each lump sum price will be deemed to include an amount considered by Contractor to be adequate to cover Contractor's overhead and profit for each separately identified item

01027 APPLICATION FOR PAYMENT

A. Schedule of Values

Submit the "Schedule of Values" to the Engineer at the earliest possible date but no later than (20) twenty Calendar Days after the Contract Start Date.

1. Format and Content: Use the Proposal Price Form as a guide to establish the format for the "Schedule of Values". Provide at least one line item for each of line item on the Proposal Price Form on electronic media printout.
2. Identification: Project identification on the Schedule of Values shall include, but not be limited to, the following:
    a. Owner
    b. Project Number
    c. Project Name
    d. Project Location
    e. Contractor's name and address.
3. Arrange the "Schedule of Values" in tabular format as required by the Owner, containing separate columns including, but not limited to, the following Items:
    a. Item Number.
    b. Description of Work with Related Specification Section or Division Number.

c. Scheduled Values broken down by description number, type material, units of each material.

d. Name of subcontractor.

e. Name of manufacturer or fabricator.

f. Name of supplier.

g. Retainage.

h. Contract sum in sufficient detail.

4. Percentage of Contract Sum to nearest one percent, adjusted to total 100 percent.

5. Provide a breakdown of the Contract Sum in sufficient detail to facilitate continued evaluation of Applications for Payment and progress reports. Coordinate with the Project Manual table of contents. Break principal subcontract amounts down into several line items.

6. Round amounts to nearest whole dollar; the total shall equal the Contract Sum.

7. Unit-Cost Allowances: Show the line-item value of unit-cost allowances, as a product of the unit cost, multiplied by the measured quantity. Estimate quantities from the best indication in the Contract Documents.

8. General Conditions: Show line items for indirect costs and margins on actual costs only when such items are listed individually in Applications for Payment. Each item in the Schedule of Values and Applications for Payment shall be complete. Include the total cost and proportionate share of general overhead and profit margin for each item.

   a. Temporary facilities and other major cost items that are not direct cost of actual work-in-place may be shown either as separate line items in the Schedule of Values or distributed as general overhead expense, at the Contractor's option.

B. Applications for Payment – General

Each Application for Payment shall be consistent with previous applications and payments as certified by the Engineer and paid for by the Owner. The initial "Application for Payment" and the final "Application for Payment", involve additional requirements.

1. Payment-Application Terms: The Owner will process monthly progress payments. The Contractor may submit applications for payment on a monthly basis.

2. Payment-Application Forms: Use the "Application for Payment" form as required by the Owner. Present the required information on electronic media printout or approved Owner Form, multiple pages should be used if required.

3. For each item, provide a column including but not limited to the following items:

   a. Item Number.

   b. Description of Work and Related Specification Section or Division.

   c. Scheduled Value, break down by units of material and units of labor.

   d. Work completed from previous application.

   e. Work completed this period.

   f. Materials presently stored.

   g. Total completed and stored to date of application,

   h. Percentage of Completion.

   i. Balance to Finish.

   j. Retainage.

4. Application Preparation: Complete every entry on the form. Include final payment only and execution by a person authorized to sign legal documents on behalf of the Contractor. The Engineer will return incomplete applications without action.

    a. Entries shall match data on the "Schedule of Values".

    b. Include amounts of Change Orders issued prior to the last day of the construction period covered by the application.

5. Transmittal: Submit 3 signed and notarized original copies of each Application for Payment to the Engineer by a method ensuring receipt. One copy shall be complete, including waivers of lien and similar attachments, when required.

    a. Transmit each copy with a transmittal form listing attachments and recording appropriate information related to the application, in a manner acceptable to the Engineer.

6. Applications for Payment: Administrative actions and submittals, that must precede or coincide with submittal of the first Application for Payment and all subsequent Application for Payments including, but not limited to, the following items:

    a. List of subcontractors and suppliers' name, FEIN/Social Security numbers, and Connecticut Tax Registration Numbers.

    b. List of principal suppliers and fabricators.

    c. Schedule of Values.

    d. Contractor's Construction Schedule (preliminary if not final).

    e. Schedule of principal products.

    f. Submittal Schedule (preliminary if not final).

    g. List of Contractor's staff assignments.

    h. List of Contractor's principal consultants.

    i. Copies of all applicable permits.

    j. Copies of authorizations and licenses from governing authorities for performance of the Work.

    k. Initial as-built survey and damage report, if required.

C. Final Payment Application

Administrative actions and submittals that must precede or coincide with submittal of the final Application for Payment include, but are not limited, to the following:

1. Completion of Project Closeout requirements.
2. Occupancy permits and similar approvals.
3. Warranties (guarantees) and maintenance agreements.
4. Test/adjust/balance records.
5. Maintenance instructions.
6. Meter readings.
7. Startup performance reports.
8. Changeover information related to Owner's occupancy, use, operation, and maintenance,
9. Final cleaning.
10. Advice on shifting insurance coverage.
11. Final progress photographs.

12. List of incomplete Work, recognized as exceptions by Owner and Engineer.
13. Ensure that unsettled claims will be settled.
14. Ensure that incomplete Work is not accepted and will be completed without undue delay.
15. Transmittal of required Project construction records to the Owner.
16. Certified final as-built and topographic survey, if required.
17. Proof that taxes, fees, and similar obligations were paid.
18. Removal of temporary facilities and services.
19. Removal of surplus materials, rubbish, and similar elements.
20. Change of locks to Owner's access.
21. The requirements of the Contract Documents for Final Acceptance, Final Completion, Final Inspection, and Final Payment.
22. Submit to the Owner, for all Contractors, Subcontractors, Vendors, Suppliers, etc. who work on the Contract. The following information:
    i. Contractor/Subcontractor name,
    ii. FEIN/Social Security Numbers.
    iii. Connecticut Tax Registration Numbers.
    iv. Type of work.
    v. Name of business and address.
    vi. Remittance address.

01035 MODIFICATION PROCEDURES

A. Summary

This Section specifies administrative and procedural requirements for handling and processing contract modifications.

B. Minor Changes in the Work

The Engineer will issue supplemental instructions authorizing Minor Changes in the Work, not involving adjustment to the Contract Sum or Contract Time, on the "Supplemental Instructions" form as required by the Owner.

C. Proposal Request

1. Engineer/Owner-Initiated Requests For Proposals: The Engineer or Owner will issue a detailed description of proposed changes in the Work that will require adjustment to the Contract Sum or Contract Time. If necessary, the description will include supplemental or revised Drawings and Specifications. Such requests shall be on a "Proposal Request" form as required by the owner.
2. "Proposal Request" is issued for information only. Do not consider them as an instruction either to stop work in progress or to execute the proposed change.
3. Within Fourteen (14) Calendar Days of receipt of a "Proposal Request", submit a "Change Order Proposal" with the required information necessary to execute the change to the Engineer for the Engineer's/Owner's review.
4. Include a list of quantities of products required and unit costs, with the total amount of purchases to be made. Where requested, furnish survey data to substantiate quantities.
    a. Indicate applicable delivery charges, equipment rental, and amounts of trade discounts.

b. Include a statement indicating the effect the proposed change in the Work will have on the Contract Time.

c. As indicated in section 3.5 of the Agreement, The Owner is tax exempt. All Contractor and Subcontractor services provided under your contract may not be exempt from taxes. The Department of Revenue Services can guide you as to which services are exempt and which are not. Please contact the State of Connecticut, Department of Revenue Services at 1-800-382-9463 or 566-7033.

d. Dollar values shown on the Schedule of Values shall not be the governing (or deciding) final amounts for change orders involving either additional charges or deletions.

D. Requests for Information

1. In the event that after the commencement of the Work, the contractor or subcontractor, at any tier, determines that some portion of the drawings, specifications, or other contract documents requires clarification or interpretation by the Engineer, the contractor shall submit a "Request for Information" in writing to the Engineer. "Requests for Information" may only be submitted by the contractor and shall only be submitted on the "Request for Information" forms as required by the owner. Such forms will be provided to the Contractor after the Commencement Date. In the "Request for Information", the contractor shall clearly and concisely set forth the issue for which clarification or interpretation is sought and why a response is needed from the Engineer.

   a. In the "Request for Information", the contractor shall set forth an interpretation or understanding of the requirement along with reasons why such an understanding was reached.

   b. The owner acknowledges that this is a complex project. Based upon the owner's past experience with projects of similar complexity, the owner anticipates that there will probably be some "Requests for Information" on this project.

   c. The Engineer will review all "Requests for Information" to determine whether they are "Requests for Information" within the meaning of this term. If it is determined that the document is not a "Request for Information", it will be returned to the contractor, unreviewed as to content, for resubmittal on the proper form and in the proper manner.

   d. A "Requests for Information Response" shall be issued within seven (7) Calendar Days of receipt of the request from the contractor unless the owner determines that a longer time is necessary to provide an adequate response. If a longer time is determined necessary by the Owner, the Owner will, within seven (7) Calendar Days of receipt of the request, notify the contractor of the anticipated response time. If the contractor submits a "Request for Information" on an activity with seven (7) Calendar Days or less of float on the current project schedule, the contractor shall not be entitled to any time extension due to the time it takes the Engineer to respond to the request provided that the Engineer responds within the seven (7) Calendar Days set forth above.

   e. A "Requests for Information Response" from Engineer will not change any requirement of the contract documents. In the event the contractor believes that the "Requests for Information Response" will cause a change to the requirements of the contract document, the contractor shall immediately give written notice to the Engineer stating that the contractor believes the "Requests for Information Response" will result in "Change Order" and the Contractor intends to submit a "Change Order Proposal" request. Failure to give such written notice immediately shall waive the contractor's right to seek additional time or cost under the requirement these Requirements.

E. Change Order Proposal

1. When either a "Request for Information" from the Contractor or a "Proposal Request" from the Engineer or Owner results in conditions that may require modifications to the Contract, the Contractor may propose changes by submitting a request for a "Change Order Proposal" to the Engineer on forms as required by the Owner. These forms shall also include "Change Order Proposal Worksheets" as required by the Owner.

a. Include statements outlining the reasons for the change and the effect of the change on the Work. Provide a complete description of the proposed change. Indicate the effect of the proposed change on the Contract Sum and Contract Time.

b. Include a list of quantities of products required and unit costs, with the total amount of purchases to be made. Where requested, furnish survey data to substantiate quantities as directed by Article 13 of the General Conditions of the Contract for Construction.

c. Indicate applicable delivery charges, equipment rental, and amounts of trade discounts.

d. Comply with requirements in Section 01631 Equals and Substitutions if the proposed change requires an equal or substitution of one product or system for a product or system specified.

2. "Change Order Request" Forms: Use "Change Order Proposal" and "Change Order Proposal Worksheets" forms as required by Owner.

3. "Change Order Proposal" cannot be submitted without the Contractor either prior submission of a "Request for Information" from the Contractor or as a response to a "Proposal Request" submitted by the Engineer or Owner.

4. Any "Change Order Request" submitted without a prior submittal of a "Request for Information" or as a response to a "Proposal Request" will be immediately rejected and returned to the Contractor.

F. Construction Change Directive

1. "Construction Change Directive": When the Owner and the Contractor disagree on the terms of a "Change Order Proposal" resulting from either a "Request for Information" or "Proposal Request", then the Engineer may issue a "Construction Change Directive" on a "Construction Change Directive" as authorized by the Owner on the form required by the Owner. The "Construction_Change Directive" instructs the Contractor to proceed with a change in the Work, for subsequent inclusion in a "Change Order".

   a. The "Construction Change Directive" contains a complete description of the change in the Work. It also designates the method to be followed to determine change in the Contract Sum or Contract Time.

2. Documentation: The Contractor shall maintain detailed records on a time and material basis of work required by the "Construction Change Directive".

   a. After completion of the change, submit an itemized account and supporting data necessary to substantiate cost and time adjustments to the Contract.

   b. The final value shall be negotiated based on the supporting data to determine the value of the work.

G. Change Order Procedures

1. Upon the Owner's approval of a Contractor's "Change Order Proposal", the Engineer will issue a "Change Order" for signatures of the Engineer, Owner and the Contractor on "Change Order" form as required by the Owner.

01040 COORDINATION

A. Construction Operations

Coordinate construction operations included in various Sections of these Specifications to assure efficient and orderly installation of each part of the Work. Coordinate construction operations included under different Sections that depend on each other for proper installation, connection, and operation.

1. Schedule construction operations in the sequence required to obtain the best results where installation of one part of the Work depends on installation of other components, before or after its own installation.

2. Coordinate installation of different components to assure maximum accessibility for required maintenance, service, and repair.

3. Make provisions to accommodate items scheduled for later installation.

B. Special Procedures

Where necessary, prepare memoranda for distribution to each party involved, outlining special procedures required for coordination. Include such items as required notices, reports, and attendance at meetings.

1. Prepare similar memoranda for the Engineer, Owner and separate contractors where coordination of their work is required.

C. Administrative Procedures

Coordinate scheduling and timing of required administrative procedures with other construction activities to avoid conflicts and assure orderly progress of the Work. Such administrative activities include, but are not limited to, the following:

1. Preparation of schedules.

2. Installation and removal of temporary facilities.

3. Delivery and processing of submittals.

4. Progress meetings.

5. Project closeout activities.

D. General Coordination Provisions

1. Inspection of Conditions: Require the Installer of each major component to inspect both the substrate and conditions under which Work is to be performed and coordinate such inspections with the Engineer and authorities having jurisdictions. If unsatisfactory conditions exist notify the Engineer immediately. Do not proceed until unsatisfactory conditions have been corrected in an acceptable manner.

2. The Contractor shall coordinate temporary enclosures with required inspections and tests to minimize the necessity of uncovering completed construction for that purpose.

01045 CUTTING AND PATCHING

A. All cutting, coring and rough patching shall be performed by the Contractor or subcontractor requiring the opening. Finish patching shall be the responsibility of the Contractor and shall be performed by the trade associated with the application of the particular finish.

B. Provide cutting, coring, fitting and patching, including attendant excavation and backfill required to complete the Work, or to:

1. Remove and replace defective Work or Work not conforming to requirements of the Contract Documents.

2. Remove samples of installed Work as specified or required for testing.

3. Remove all constructions required to provide for specified alterations or addition to existing work.

4. Uncover Work to provide for Engineer's observation of covered Work or observation by regulatory agencies having jurisdiction.

5. Connect to completed Work that was not accomplished in the proper sequence.

6. Remove or relocate existing utilities and pipes which obstruct the Work in locations where connections must be made.

7. Make connections or alterations to existing or new facilities.

C. Replace, patch and repair materials and surfaces cut or damaged during cutting and patching operations, by methods and with materials in such a manner as to not void required or existing warranties.

D. Use materials identical to existing materials. For exposed surfaces, use materials that visually match existing adjacent surfaces to fullest extent possible. If identical materials are unavailable or cannot be used, use materials whose installed performance will equal or surpass that of existing materials.

E. Perform all cutting and coring in such a manner as to limit the extent of patching.

F. Core drill all holes to be cut through concrete and masonry walls, slabs or arches, unless otherwise approved.

G. Examine surfaces to be cut and patched and conditions under which cutting and patching are to be performed before cutting.

H. Report unsatisfactory or questionable conditions to Engineer in writing. Do not proceed with work until the Engineer has provided further instructions.

I. Provide temporary support as required to maintain structural integrity of Project, to protect adjacent Work from damage during cutting, and to support the work to be cut.

J. Protect existing construction during cutting and patching to prevent damage. Provide protection from adverse weather conditions for portions of the Project that will be exposed during cutting and patching operations.

1. Avoid interference with use of adjoining areas or interruption of free passage to adjoining areas.

2. Do not cut existing pipe, conduit or ductwork serving facilities scheduled to be removed or relocated until provisions have been made to bypass them.

K. Cut existing construction using methods least likely to damage elements retained or adjoining construction, and that will provide proper surfaces to receive installation or repair.

1. In general, use hand or small power tools designed for sawing or grinding, not hammering and chopping.

2. Cut through concrete and masonry using a concrete wall saw with diamond saw blades.

a. Provide for control, on both sides of walls, of slurry generated by sawing.

L. Patch construction by filling, repairing, refinishing, closing-up and similar operations following performance of other Work. Patch with durable seams that are as invisible as possible. Provide materials and comply with installation requirements specified, in other Sections of these Specifications.

01050 FIELD ENGINEERING

A. Provide field engineering services to establish and record grades, lines and elevations.

B. The Contractor shall retain a Professional Engineer or Land Surveyor registered by the State of Connecticut acceptable to the Contractor and the Owner to ensure the site work and installations do not encroach on any public right-of-way and to establish and record the necessary elevations, at no additional cost to the Owner.

C. The Contractor shall:

1. Provide civil, structural or other professional engineering services specified, or required to execute Contractor's construction methods.

2. Develop and make all detail surveys and measurements needed for construction including slope stakes, batter boards, piling layouts and all other working lines, elevations and cut sheets.

3. Keep a transit and leveling instrument on the Site at all times and a skilled instrument man available whenever necessary for layout of the Work.

4. Provide all material required for bench marks, control points, batter boards, grade stakes, and other items.

5. Be solely responsible for all locations, dimensions and levels, and for all surveying done at the site. No data other than written orders of the Engineer shall justify departure from the dimensions and levels required by the Contract Documents.

6. Rectify all Work improperly installed because of not maintaining, not protecting or removing without authorization such established points, stakes, marks and monuments.

7. Provide such facilities and assistance as may be necessary for Engineer to check line and grade points placed by Contractor. Contractor shall not do any excavation or embankment work until all cross-sectioning necessary for determining pay quantities has been completed and checked by Engineer.

8. Contractor shall establish two (2) permanent benchmarks and three (3) survey control points located within and near the perimeter of the landfill in positions unlikely to be disturbed by vehicular traffic or construction operations.

9. Contractor shall take measures to protect site reference and survey control points prior to starting site work, and must preserve permanent reference points during construction. Site reference points may not be relocated without prior written notice to Owner.

10. The Owner shall be immediately notified of loss, damage or destruction of any reference point, or relocation required because of changes in grades or other reasons. Contractor shall replace disturbed survey control points based on original survey control at no extra cost.

11. X, Y, and Z coordinated of benchmarks and survey control points shall be determined (and recorded) with a maximum permissible error of 0.10 feet (±) in any coordinate direction. All X and Y coordinates are to be referred to the Connecticut State coordinate system (NAD 27). All Z coordinates are to be referred to nearest USGS benchmark with an accuracy of 0.10 feet (±) (NGVD 29).

12. Contractor shall reference survey and data reference points to permanent benchmarks and record locations of survey control points, with horizontal and vertical data, on Project Record Documents.

D. Employ and retain at the Site a field engineer with experience and capability of performing all engineering tasks required of the Contractor. Tasks included are:

1. Providing daily construction reports as specified in Section 01300.

2. Furnish all required lines and grades for construction operations.

3. Check all formwork, reinforcing, inserts, structural steel, bolts, sleeves, piping, other materials and equipment.

4. Maintain field office files and drawings, Record Drawings, and coordinate engineering services with Subcontractors. Prepare layout and coordination drawings for construction operations.

5. Check and coordinate Work for conflicts and interferences and immediately advise Engineer of all discrepancies noted.

6. Cooperate with Engineer in field inspections as required.

E. Records: Maintain a complete, accurate log of all control and survey work as it progresses.

F. On completion of the project, prepare a full set of marked up drawings accurately indicating the location and (for subgrade construction) elevations of the installed facilities.

G. Submittals:

1. On request of Engineer, submit documentation to verify accuracy of field engineering work.
2. When requested by Engineer, submit certificate signed by registered engineer or surveyor certifying that elevations and locations of Work are in conformance with Contract Documents. Explain all deviations.

01095 REFERENCE STANDARDS & DEFINITIONS

A. For products specified by association or trade standards, comply with requirements of the standard, except when more rigid requirements are specified or are required by applicable codes.

B. References to standard specifications and codes refer to the editions current at the proposal due date. An exception is, buildings exceeding the threshold limit must be in substantial compliance with the requirements of the effective code at the time of receipt of completed application to the Office of State Building Inspector (OSBI). References include their addenda and errata, if any, and shall be considered a part of these specifications as if they were printed herein in full.

C. The manufacturers' standard warranties or guarantees shall apply when their products are used on this project.

D. Flame Spread Ratings - all materials that are required or obligated to meet specified standards shall be submitted to the owner for their records as part of the shop drawing submittal process for their construction records.

01120 RENOVATION/DEMOLITION PROJECT PROCEDURES

A. Products For Patching And Extending Work

1. New materials: As specified in product sections; match existing Products and Work for patching and extending Work.
2. Type and Quality of Existing Products: Determine by inspecting and testing Products where necessary, referring to existing Work as a standard.

B. Inspection - General

1. Verify that demolition is complete and areas are ready for installation of new Work.
2. Beginning of restoration Work means acceptance of existing conditions.

C. Preparation

1. Cut, move, or remove items as are necessary for access to alterations and renovation Work. Replace and restore at completion.
2. Remove unsuitable material not marked for salvage, such as rotted wood, corroded metals, and deteriorated masonry and concrete. Replace materials as specified for finished Work.
3. Remove debris and abandoned items from area and from concealed spaces.
4. Prepare surface and remove surface finishes to provide for proper installation of new Work and finishes.
5. Close openings in exterior surfaces to protect existing Work and salvage items from weather and extremes of temperature and humidity. Insulate ductwork and piping to prevent condensation in exposed areas.

D. Installation

1. Coordinate Work of alterations and renovations to expedite completion and if required sequence Work to accommodate Owner occupancy.

2. Remove, cut and patch Work in a manner to minimize damage and to provide restoring Products and finishes to original and or specified condition in accordance with Section 01045 "Cutting and Patching".

3. In addition to specified replacement of equipment, restore existing plumbing, ventilation, and electrical systems to full operational condition.

4. Recover and refinish Work that exposes mechanical and electrical Work exposed accidentally during the Work.

5. Install Products as specified in individual sections.

E. Transitions

1. Where new Work abuts or aligns with existing, perform a smooth and even transition. Patch work to match existing adjacent Work in texture and appearance.

2. When finished surfaces are cut so that a smooth transition with new Work is not possible, terminate existing surface along a straight line at a natural line of division and make recommendation to Engineer.

F. Adjustments

1. Fit Work at penetrations of surfaces as specified in Section 01045 "Cutting and Patching".

G. Repair of Damaged Surfaces

1. Patch or replace portions of existing surfaces that are damaged, lifted, discolored, or showing imperfections.

2. Repair substrate prior to patching finish.

H. Finishes

1. Finish surfaces as specified in individual Product sections.

2. Finish patches to produce uniform finish and texture over entire area. When finish cannot be matched, refinish entire surface to nearest intersections.

01200 PROJECT MEETINGS

A. Pre-construction Conference:

1. The Contractor will attend a Pre-construction Conference before starting construction, as scheduled by the Engineer convenient to the Owner, the Engineer, and Contractor. This meeting will take place within fourteen (14) Calendar Days after the written Notice to Proceed and before the Contract Start Date. Hold the conference at the Project Site or another convenient location as directed by the Engineer. The Engineer shall conduct the Pre-construction Conference to review the Contractor and Subcontractor responsibilities and personnel assignments.

2. Attendees: Authorized representatives of the Owner, Engineer, and their consultants: the Contractor and its superintendent; major subcontractors; and other concerned parties shall attend the conference. All participants at the conference shall be familiar with the Project and authorized to conclude matters relating to the Work.

3. Agenda: Discuss items of significance that could affect progress, including the following:

    a. Tentative construction schedule.

    b. Critical work sequencing.

    c. Progress meeting schedule.

    d. Designation of responsible personnel.

    e. Subcontractors.

f. Procedures for processing field decisions and Change Orders.

g. Procedures for processing Applications for Payment.

h. Distribution of Contract Documents.

i. Insurance in force.

j. Schedule of values.

k. Submittal of Shop Drawings, Product Data, and Samples.

l. Preparation of record documents.

m. Use of the premises.

n. Parking availability.

o. Office, work, and storage areas.

p. Equipment deliveries and priorities.

q. Safety procedures.

r. First aid.

s. Security.

t. Housekeeping.

u. Working hours.

B. Progress Meetings

1. The Engineer will conduct progress meetings, bi-weekly, at the Project Site or at regular intervals as agreed upon at the Pre-construction Conference. The Engineer will notify the Owner, the Regulatory Authority, and the Contractor of the scheduled Progress Meeting dates. Coordinate dates of Progress Meetings with preparation of Application for Payment requests.

2. Attendees: In addition to representatives of the Contractor, Owner and the Engineer, subcontractor, supplier, or other entity concerned with current progress or involved in planning, coordination, or performance of future activities may be requested to attend these meetings on an as needed basis. All participants at the meeting shall be familiar with the Project and authorized to conclude matters relating to the Work. The Contractor shall include the site superintendent as a minimum.

3. Agenda: Progress Meetings shall review and correct or approve minutes of the previous Progress Meeting. Review other items of significance that could affect progress. Include topics for discussion as appropriate to the status of the Project.

    a. Construction Schedule: Review progress since the last Progress Meeting. Determine where each activity is in relation to the required Contractor's "Construction Schedule" and whether each activity is on time or ahead or behind Schedule. Determine how Work that is behind Schedule will be expedited; secure commitments from parties involved to do so. Discuss whether Schedule revisions are required to insure that current and subsequent activities will be completed within the Contract Time. Determine if any Change Orders are needed, the status of existing Change Orders, and alterations to the project schedule due to Change Orders.

    b. Review the present and future needs of each entity present

4. Reporting: The Engineer will distribute minutes of the meeting to each party present, promptly and before the next scheduled meeting, and to parties who should have been present.

5. A schedule of regular Project Meetings will be established at the Pre-construction Conference.

01300 SUBMITTALS

A. Summary

1. This Section includes administrative and procedural requirements for submittals required for performance of the Work, including but not limited to the following:
    a. Submittal schedule.
    b. Shop Drawings.
    c. Product Data.
    d. Samples.
    e. Quality assurance submittals.
    f. Proposed "Substitutions Request" form.
    g. Warrantee samples.
    h. Coordination Drawings.
    i. O & M Manuals.
    j. Health and Safety Plan. Contractor shall prepare a Health and Safety Plan to address potential hazards to the on-site personnel and the surrounding community.

B. Administrative Submittals

Refer to other Division 1 Sections and other Contract Documents for requirements for administrative submittals. Such submittals include, but are not limited to, the following:

1. Permits.
2. Applications for Payment.
3. Performance and payment bonds.
4. Contractor's construction schedule.
5. Daily construction reports.
6. Construction Photographs.
7. Insurance certificates.
8. List of subcontractors.
9. Subcontractors/Suppliers FEIN #'s and Connecticut tax registration #.

C. Definitions

1. Coordination Drawings show the relationship and integration of different construction elements that require careful coordination during fabrication or installation to fit in the space provided or to function as intended and as identified in the Specifications.
    a. Preparation of Coordination Drawings is specified in Division 1 Section "Coordination" and may include components previously shown in detail on Shop Drawings or Product Data.
2. Field samples are full-size physical examples erected on-site to illustrate finishes, coatings, or finish materials. Field samples are used to establish the standard by which the Work will be judged.
3. Mockups are full-size assemblies for review of construction, coordination, testing, or operation; they are not Samples.

D. Submittal Procedures:

1. Coordination: Coordinate preparation and processing of submittals with performance of construction activities. Transmit each submittal sufficiently in advance of performance of related construction activities to avoid delay.
2. Coordinate each submittal with fabrication, purchasing, testing, delivery, other submittals. and related activities that requires sequential activity.
3. Coordinate transmittal of different types of submittals for related elements of the Work so processing will not be delayed by the need to review submittals concurrently for coordination.
4. The Engineer reserves the right to withhold action on a submittal requiring coordination with other submittals until all related submittals are received.
5. The Engineer reserves the right to reject incomplete submitted packages.
6. Processing: To avoid the need to delay installation as a result of the time required to process submittals, allow sufficient time for submittal review, including time for resubmittals.
    a. Allow (1) one week for initial review. Allow additional time if the Engineer must delay processing to permit coordination with subsequent submittals.
    b. If an intermediate submittal is necessary, process the same as the initial submittal.
    c. Allow (1) one week for reprocessing each submittal.
    d. No extension of Contract Time will be authorized because of failure to transmit submittals to the Engineer sufficiently in advance of the Work to permit processing.

E. Submittal Preparation

Place a permanent label, title block or 8-1/2 inches x 11 inches cover page approved by the Engineer, on each submittal for identification. Indicate the name of the entity that prepared each submittal on the label or title block.

1. The minimum number of copies required for each submittal shall be at a minimum 4 copies or as determined otherwise at the pre-construction conference or by the Engineer.
2. Provide a space approximately 4 inches by 5 inches on the label, beside the title block or on the cover page on Shop Drawings to record the Contractor's review and approval markings and the action taken.
3. Include the following information on the label for processing and recording action taken.
    a. Project Name and Project Number.
    b. Date.
    c. Name and address of the Engineer, and Owner Representative.
    d. Name and address of the Contractor.
    e. Name and address of the subcontractor.
    f. Name and address of the supplier.
    g. Name of the manufacturer.
    h. Number and title of appropriate Specification Section.
    i. Drawing number and detail references, as appropriate.
    j. Indicate either initial or resubmittal.
    k. Indicate deviations from Contract Documents.
    l. Indicate if "equal" or "substitution".

F. Submittal Transmittal

Package each submittal appropriately for transmittal and handling. Transmit each submittal from the Contractor to the Engineer using a transmittal form. The Engineer will return all submittals to the Contractor after action is taken with a complete copy of the submittal package and one complete copy of the submittal package. The Engineer will not accept submittals received from sources other than the Contractor.

1. On the transmittal, record relevant information and requests for data. On the form, or separate sheet, record deviations from Contract Document requirements, including variations and limitations. Include Contractor's certification that information complies with Contract Document requirements.

G. Submittal Schedule

1. After development and review by the Owner and Engineer acceptance of the Contractor's Construction Schedule prepare a complete schedule of submittals. Submit the schedule to the Engineer within 14 days of Contract Award.
2. Coordinate Submittal Schedule with the list of subcontracts, Schedule of Values, and the list of products as well as the Contractor's Construction Schedule
3. Prepare the schedule in chronological order. Provide the following information:
    a. Schedule date for the initial submittal.
    b. Related section number.
    c. Submittal category (Shop Drawings, Product Data, or Samples).
    d. Name of Subcontractor.
    e. Description of the part of Work covered.
    f. Scheduled date for resubmittal.
    g. Scheduled date for the Engineer's final release of approval.

H. Distribution

Following response to the initial submittal, print and distribute copies to the Engineer, Owner, subcontractors, and other parties required to comply with submittal dates indicated. Post copies in the Project meeting room and field office.

1. When revisions are made, distribute to the same parties and post in the same locations. Delete parties from distribution when they have completed their assigned portion of the Work and are no longer involved in construction activities.

I. Schedule Updating

Revise the schedule after each meeting or activity where revisions have been recognized or made. Issue the updated schedule concurrently with the report of each meeting.

J. Shop Drawings

1. Submit newly prepared information drawn accurately to scale. Highlight, encircle, or otherwise indicate deviations from the Contract Documents. Do not reproduce Contract Documents or copy standard information as the basis of Shop Drawings. Standard information prepared without specific reference to the Project is not a Shop Drawing.
2. Shop Drawings include fabrication and installation Drawings, setting diagrams, schedules, patterns, templates and similar Drawings. Include the following information:
    a. Dimensions.
    b. Identification of products and materials included by sheet and detail number.
    c. Compliance with specified standards.

d. Notation of coordination requirements.

e. Notation of dimensions established by field measurement.

f. Sheet Size: Except for templates, patterns and similar full-size Drawings, submit Shop Drawings on sheets at least 8-1/2 by 11 inches but no larger than 36 by 48 inches.

g. Submit one (1) reproducible media and three (3) prints as directed by the Engineer. The Contractor's submittal shall identify the specification section and/or drawing number applicable to the submittal.

h. Details shall be large scale and/or full size.

3. The Contractor shall review the Shop Drawings, stamp with this approval, and submit them with reasonable promptness and in orderly sequence so as to cause no delay in its Work or in the Work of any subcontractor. Shop Drawings shall be properly identified as specified for item, material, workmanship, and project number. At the submission, the Contractor shall inform the Engineer, in writing of any deviation in the shop drawings from the requirements of the Contract Documents.

4. The Engineer will review and comment on shop drawings with reasonable promptness so as to cause no delay, but only for conformance with the design concept of the project and with the information given in the Contract Documents. Refer to Article 5 of General Conditions. Shop Drawings received by the Engineer that indicate insufficient study of drawings and specifications, illegible portions or gross errors, will be rejected outright. Such rejections shall not constitute an acceptable reason for granting the Contractor additional time to perform the work.

5. The Contractor shall make any corrections required by the Engineer and shall resubmit the required number of corrected copies of shop drawings until fully reviewed.

6. Upon final review submit four (3) additional prints, same as submitted, to the Engineer for its use.

7. The Engineer's review and comments on shop drawings shall not relieve the Contractor of responsibility for any deviation from the requirements of the Contract Documents.

8. Only final reviewed shop drawings are to be used on the project site.

9. The Work installed shall be reviewed in accordance with the shop drawings and the drawings and specifications. Final Review of the shop drawings by the Engineer shall constitute acceptance by the Owner and the Engineer of a variation or departure that is clearly identified. Final reviewed shop drawings shall not replace or be used as a vehicle to issue or incorporate change orders.

K. Product Data

1. Collect Product Data into a single submittal for each element of construction or system. Product Data includes printed information, schedules, such as manufacturer's installation instructions, catalog cuts, standard color charts, roughing-in diagrams and templates, standard wiring diagrams, and performance curves.

2. Mark each copy to show applicable choices and options. Where printed Product Data includes information on several products that are not required, mark copies to indicate the applicable information. Include the following information:

a. Manufacturer's printed recommendations.

b. Compliance with trade association standards.

c. Compliance with recognized testing agency standards.

d. Application of testing agency labels and seals.

e. Notation of dimensions verified by field measurement.

f. Notation of coordination requirements.

3. Do not submit Product Data until compliance with requirements of the Contract Documents has been confirmed.

4. Preliminary Submittal: Submit a preliminary single copy of Product Data where selection of options is required.

5. Submittals: Submit 3 copies of each required submittal; submit 3 copies where required for maintenance manuals. The Engineer will retain one and will return the other marked with action taken and corrections or modifications required.

   a. Unless noncompliance with Contract Document provisions is observed, the submittal may serve as the final submittal.

6. 6. Distribution: Furnish copies of final submittal to installers, subcontractors, suppliers, manufacturers, fabricators, and others required for performance of construction activities. Show distribution on transmittal forms.

   a. Do not proceed with installation until a copy of Product Data is in the Installer's possession.

   b. Do not permit use of unmarked copies of Product Data in connection with construction.

L. Samples

1. Submit full-size, fully fabricated Samples cured and finished as specified and physically identical with the material or product proposed. Samples include partial sections of manufactured or fabricated components, cuts or containers of materials, color range sets, and swatches showing color, texture, and pattern.

2. Store, mount or display Samples on site in the manner to facilitate review of qualities indicated. Prepare Samples to match the Engineer's sample. Include the following:

   a. Specification Section number and reference.

   b. Generic description of the Sample.

   c. Sample source.

   d. Product name or name of the manufacturer.

   e. Compliance with recognized standards.

   f. Availability and delivery time.

3. Submit Samples for review of size, kind, color, pattern, and texture. Submit Samples for a final check of these characteristics with other elements and a comparison of these characteristics between the final submittal and the actual component as delivered and installed.

   a. Where variation in color, pattern, texture, or other characteristic is inherent in the material or product represented, submit at least three (3) multiple units that show approximate limits of the variations.

   b. Refer to other Specification Sections for requirements for Samples that illustrate workmanship, fabrication techniques, details of assembly, connections, operation, and similar construction characteristics.

   c. Refer to other Sections for Samples to be returned to the Contractor for incorporation in the Work. Such Samples must be undamaged at time of use. On the transmittal, indicate special requests regarding disposition of Sample submittals.

   d. Samples not incorporated into the Work, or otherwise designated as the Owner's property, are the property of the Contractor and shall be removed from the site prior to Substantial Completion.

4. Preliminary Submittals: Submit a full set of choices where Samples are submitted for selection of color, pattern, texture, or similar characteristics from a range of standard choices, unless otherwise noted in specification section.

    a. The Engineer will review and return preliminary submittals with the Engineer's notation, indicating selection and other action.

5. Submittals: Except for Samples illustrating assembly details, workmanship, fabrication techniques, connections, operation, and similar characteristics, submit three (3) sets. The Engineer will return one set marked with the action taken.

6. Maintain sets of Samples, as returned, at the Project Site, for quality comparisons throughout the course of construction.

    a. Unless noncompliance with Contract Document provisions is observed, the submittal may serve as the final submittal.

    b. Sample sets may be used to obtain final acceptance of the construction associated with each set.

7. Distribution of Samples: Prepare and distribute additional sets to subcontractors, manufacturers, fabricators, suppliers, installers, and others as required for performance of the Work. Show distribution on transmittal forms.

    a. Field samples are full-size examples erected on-site to illustrate finishes, coatings, or finish materials and to establish the Project standard.

M. Quality Assurance Submittals

1. Submit quality-control submittals, including design data, certifications, manufacturer's instructions, manufacturer's field reports, and other quality-control submittals as required under other Sections of the Specifications.

2. Certifications: Where other Sections of the Specifications require certification that a product, material, or installation complies with specified requirements, submit a notarized certification from the manufacturer certifying compliance with specified requirements.

    a. Signature: Certification shall be signed by an officer of the manufacturer or other individual authorized to sign documents on behalf of the company.

3. Inspection and Test Reports: Requirements for submittal of inspection and test reports from independent testing agencies are specified in Division 1 Section "Quality Control."

N. Engineer's Action

1. Except for submittals for the record or information, where action and return is required, the Engineer will review each submittal, mark to indicate action taken, and return promptly.

    a. Compliance with specified characteristics is the Contractor's responsibility.

2. Action Stamp: The Engineer will stamp each submittal with a uniform, action stamp. The Engineer will mark the stamp appropriately to indicate the action taken, as follows:

    a. Final Unrestricted Release: When the Engineer marks a submittal "Approved for fabrication," the Work covered by the submittal may proceed provided it complies with requirements of the Contract Documents. Final payment depends on that compliance.

    b. Final-But-Restricted Release: When the Engineer marks a submittal "Incorporate Notations," the Work covered by the submittal may proceed provided it complies with notations or corrections on the submittal and requirements of the Contract Documents. Submit corrected copies for record. Final payment depends on that compliance.

c. Returned for Resubmittal: When the Engineer marks a submittal "Rejected, or Revise and Resubmit," do not proceed with Work covered by the submittal, including purchasing, fabrication, delivery, or other activity. Revise or prepare a new submittal according to the notations; resubmit without delay. Repeat if necessary to obtain different action mark.

d. Do not use, or allow others to use, submittals marked "Rejected, or Revise and Resubmit" at the Project Site or elsewhere where Work is in progress.

e. Other Action: Where a submittal is for information or record purposes or special processing or other activity, the Engineer will return the submittal marked "Action Not Required."

3. Unsolicited Submittals: The Engineer will discard unsolicited submittals without action.

O. Cutting and Patching

1. Submit a written request to Engineer well in advance of executing any cutting or alteration which affects:

   a. Design function or intent of Project.

   b. Work of Owner or any other contractor.

   c. Structural value or integrity of any element of the Project.

   d. Integrity or effectiveness of weather-exposed or moisture-resistant elements or systems.

   e. Efficiency, operational life, maintenance or safety of operational elements.

   f. Visual qualities of sight-exposed elements.

2. Request shall include:

   a. Identification of Project.

   b. Description of affected Work of Contractor and work of others.

   c. Necessity for cutting.

   d. Effect on work of Owner or any other contractor, or on structural or weatherproof integrity of Project.

   e. Description of proposed Work, describing:

      1. Scope of cutting and patching.

      2. Trades who will be executing the work.

      3. Products proposed to be used.

      4. Extent of refinishing.

      5. Schedule of operations.

   f. Alternatives to cutting and patching, if any.

   g. Designation of party responsible for cost of cutting and patching, when applicable,

   h. Written permission of any other contractor whose work will be affected.

3. Should conditions of Work, or schedule, indicate a change of materials or methods, submit written recommendation to Engineer, including:

   a. Conditions indicating change.

   b. Recommendations for alternative materials or methods.

   c. Submittals as required for substitutions.

01310 CONSTRUCTION SCHEDULE

A. Definitions

1. Construction Schedule: A method of planning and scheduling a construction project utilizing a horizontal bar chart with a separate bar for each major portion of the Work or operation to make the schedule an effective tool for planning and monitoring the progress of the work.

B. Format

1. Format: Utilize a horizontal bar chart (gantt) with a separate bar for each major portion of the Work or operation, identifying first work day of each week.
2. Program: Use Microsoft Project, latest version, or approved equal.
3. Sequence of Listings: Utilize the Table of Contents of this Project Manual and the chronological order of the start of each item of work.
4. Scale and Spacing: Provide space for notations and revisions.
5. Sheet Size: To be coordinated with Engineer.

C. Quality Assurance

The Contractor's Consultant: Retain a consultant to provide planning, evaluating, and reporting by CPM scheduling.

1. In-House Option: The Owner may waive the requirement to retain a consultant if the Contractor can demonstrate that:
   a. The Contractor has the computer equipment required to produce construction schedules.
   b. The Contractor employs skilled personnel with experience in construction scheduling and reporting techniques.
2. Program: Use "Microsoft Project" compatible, latest version, or approved equal.
3. Standards: Comply with procedures contained in AGC's "Construction Planning & Scheduling."

D. Content

1. Show complete sequence of construction by activity, with dates beginning and completion of each element of construction.
2. Identify each item by specification section number.
3. Identify work of separate phases other and other logically grouped activities.
4. Show accumulated percentages of completion of each item, and total percentage of Work completed, as of the first day of each month.
5. Provide separate schedule of submittal dates for shop drawings, product data, and samples, Owner furnished products and any products identified as under Allowances, and dates reviewed submittals will be required from Engineer. Indicate decision dates for selection of finishes.
6. Indicate delivery dates for Owner furnished products and any products identified as under Allowances.
7. Coordinate content with Schedule of Values specified in Section 01027.

E. Submittals and Revisions To Schedules

1. Indicate progress of each activity to date of submittal, and projected completion date of each activity.
2. Identify activities modified since previous submittal, major changes in scope, other identifiable changes.

3. Provide narrative report to define problem areas, anticipated delays, and impact on Schedule. Report corrective action taken, or proposed, and its effect.

4. An initial bar graph (gantt) schedule is to be prepared by the General Contractor and submitted to the Engineer within seven (7) calendar days of award of contract. This schedule is to cover all items of work from the start of the project up to the completion of the project. After review, re-submit required revised data within five (5) calendar days. This schedule must be revised monthly and when the actual schedule of significant items varies more than one (1) week from the proposed schedule.

5. Submit revised Construction Schedules each Application for Payment.

6. Submit two (2) copies of the Construction Schedule to the Engineer.

F. Distribution

1. Distribute copies of the Construction Schedules to Engineer, Owner, Subcontractors, suppliers, and other concerned parties.

2. Instruct recipients to promptly report, in writing, problem anticipated by projections indicated in schedules.

01400 QUALITY CONTROL

A. Independent Testing Agencies

Contractor shall select and employ and pay for independent testing agencies, approved by Owner, to perform all required analyses on proposed materials and other quality-control services specified elsewhere in the Contract Documents and required by authorities having jurisdiction. All field tests, inspections, sampling and testing required by the individual specification sections will be performed by an independent testing agency retained by the Contractor. The Contractor shall inform the Engineer 48 hours in advance of areas ready for field testing as applicable. Costs for these services are included in the Contract Sum. In addition to tests required to be performed by the Contractor's testing laboratory, the Owner reserves the right to hire their own testing laboratory and conduct any and all tests appropriate or necessary to check conformance of the Work with the Contract Documents.

1. Materials for this project will be tested and construction operations inspected as the work progresses. Failure to detect any defective work or material shall not in any way prevent later rejection when such defect is discovered nor shall it obligate the Owner for final acceptance.

B. Retesting

The Contractor is responsible for field retesting where results of inspections, tests, or other quality-control services provide unsatisfactory results and indicate noncompliance with Contract Document requirements.

1. The cost of retesting construction, revised or replaced by the Contractor, is the Contractor's responsibility where required tests performed on original construction indicated noncompliance with Contract Document requirements.

2. The Owner will issue a deduct change order to cover all costs incurred related to all re-tests/re-inspection due to non-compliance to the contract documents, including but not limited to the Owners costs and the Engineers costs.

C. Associated Services

Contractor shall cooperate with agencies performing required inspections, field tests, and similar services, and provide reasonable auxiliary services as requested. Notify the agency sufficiently in advance of operations to permit assignment of personnel. Auxiliary services required include but are not limited to, the following:

1. Provide access to the Work.

2. Furnish incidental labor and facilities necessary to facilitate inspections and tests.
3. Take adequate quantities of representative samples of materials that require testing or assist the agency in taking samples.
4. Provide facilities for storage and curing of test samples.
5. Deliver samples to testing laboratories, if requested by Owner.
6. Provide an approved design mix proposed for use for material mixes that require control by the testing agency.
7. Provide security and protection of samples and test equipment at the Project Site.

D. Duties of the Testing Agency

The independent field testing agency engaged by the Contractor to perform inspections, sampling, and testing of materials and construction specified in individual Sections shall cooperate with the Engineer and Contractor in performance of the testing agency's duties. The testing agency shall provide qualified personnel promptly to perform required inspections and tests.

1. The field testing agency shall notify the Owner, the Engineer and the Contractor promptly of any irregularities or deficiencies observed in the Work during performance of its services.
2. The field testing agency is not authorized to release, revoke, alter, or enlarge requirements of the Contract documents or approve or accept any portion of the Work.
3. The field testing agency shall not perform any duties of the Contractor.
4. The field testing agency shall perform specified inspections, sampling and testing of materials and methods of construction and ascertain compliance with requirements of the Contract Documents.
5. The field testing agency shall perform additional tests and services as required to assure compliance with the Contract Documents.

E. Payment

Owner will pay for the services of the Contractor's independent testing agency laboratory, to perform at the Owner's discretion, additional inspections, tests and other services beyond those required by the Specifications, in which case the Owner will issue a credit change order to cover the cost associated with these tests. The Owner will not pay for additional testing in the following cases.

1. When the Contractor notifies the Engineer and/or Testing Agency less than 24 hours before the expected time of testing.
2. When the Contractor requires testing for its own convenience.
3. When the Contractor schedules a test and is not ready for the required test.

F. Reports

Reports of test that are part of the submittal requirements which indicate compliance or non-compliance with the specified standard.

G. Submittals

1. The Contractor shall submit the name and qualifications of any independent testing agencies to be used on this project for approval by the Owner.
2. Unless the Contractor is responsible for this service, the independent testing agency shall submit a certified written report, in duplicate, of each inspection, test, or similar service to the Engineer. If the Contractor is responsible for the service, submit a certified written report, in duplicate, of each inspection, test, or similar service through the Contractor.
3. Submit additional copies of each written report directly to the governing authority, when the authority so directs.

4. Report Data: Written reports of each inspection, test, or similar service include, but are not limited to, the following:

    a. Date of issue.

    b. Project title and number.

    c. Name, address, and telephone number of testing agency.

    d. Dates and locations of samples and tests or inspections.

    e. Names of individuals making the inspection or test.

    f. Designation of the Work and test method.

    g. Identification of product and Specification Section,

    h. Complete inspection or test data.

    i. Test results and an interpretation of test results.

    j. Ambient conditions at the time of sample taking and testing.

    k. Comments or professional opinion on whether inspected or tested Work complies with Contract Document requirements.

    l. Name and signature of laboratory inspector.

    m. Recommendations on re-testing.

H. Quality Assurance

1. Qualifications for Service Agencies: Engage inspection and testing service agencies, including independent testing laboratories, that are pre-qualified as complying with the National Voluntary Laboratory Accreditation Program and that specialize in the types of inspections and tests to be performed.

    a. Each independent inspection and testing agency engaged on the Project shall be authorized by authorities having jurisdiction to operate in the state where the Project is located.

    b. Where applicable, meet "Recommended Requirements for Independent Laboratory Qualification", latest edition, published by American Council of Independent Laboratories and the basic requirements of ASTM E 329, "Standards of Recommended Practice for Inspection and Testing Agencies for Concrete and Steel as Used in Construction".

    c. Submit copy of report of inspection of facilities made by Materials Reference Laboratory of National Bureau of Standards during most recent tour of inspection; with memorandum of remedies of any deficiencies reported by inspection.

    d. Testing Equipment:

        1. Calibrated at maximum 12 month intervals by devices of accuracy traceable to either National Bureau of Standards or accepted values of natural physical constants.

        2. Submit copy of certificate of calibration, made by accredited calibration agency.

I. Repair and Protection

1. General: Upon completion of inspection, testing, sample taking and similar services, repair damaged construction and restore substrates and finishes.

2. Protect constructions exposed by or for quality-control service activities, and protect repaired construction.

3. Repair and protection is Contractor's responsibility, regardless of the assignment of responsibility for inspection, testing, or similar services.

01505 TEMPORARY ELECTRICITY AND LIGHTING

A. Power and lighting may be taken from the power company's nearest pole with temporary poles, if needed, to extend the line to project. If permanent power lines have been installed before beginning project, then temporary lines can be brought in from the last pole.

B. Provide service required for construction with branch wiring and distribution boxes located to provide power and lighting by construction-type extension cords. Meter shall be provided and installed by the Contractor.

C. All costs of temporary power and light shall be paid by the Contractor.

01515 TEMPORARY TELEPHONE

A. It is preferred the Contractor use a cellular phone. Local calls will be paid by the Contractor and toll calls by the respective users.

01520 TEMPORARY WATER

A. Water is not available on site. Transport water to the project. Cost shall be paid by the General Contractor.

01525 TEMPORARY SANITARY FACILITIES

A. The Contractor shall provide, where directed, chemical toilets with toilet tissue, plus wash basins with water, soap and paper towels. The Contractor shall maintain the facilities in a sanitary condition.

B. If women are employed in the work, provide separate, designated facilities for them of the same kind. Provide an adequate number of each kind of facility for each gender.

01530 FIRE PROTECTION

A. The Contractor, during construction, shall be responsible for loss or damage by fire to the work of the Contract until completion. Any fire used within the structure for working purposes shall be extinguished when not in use. Bitumen or tar shall be melted on the ground only. No flammable material shall be stored in the structure in excess of amounts allowed by the authorities. No gasoline shall be stored in or close to on-site buildings at any time. The Contractor shall assign a responsible employee to be in charge of fire protection measures.

01535 CONSTRUCTION EQUIPMENT

A. The Contractor shall furnish tools, apparatus and appliances, hoists and/or cranes and power for same, scaffolding, runways, ladders, temporary supports and bracing and similar work or material necessary to insure convenience and safety in the execution of the Contract except where this is otherwise specified in any Specification Section. All such items shall meet the approval of the Owner but responsibility for design, strength and safety shall remain with the Contractor. All such items shall comply with Federal OSHA regulations and applicable codes, statutes, rules and regulations, including compliance with the requirements of the current edition of the "Manual of Accident Prevention in Construction" published by the A.G.C. and the standards of the State Labor Department.

B. Staging, exterior and interior, required for the execution of this Contract, shall be furnished, erected, relocated if necessary and removed by the General Contractor. Staging shall be maintained in a safe condition without charge to and for the use of all trades as needed.

01540 BARRIERS AND ENCLOSURES

A. Provide barriers to prevent public entry into construction areas and to protect existing facilities from damage by construction operations.

B. Provide a fence around construction site; equip with vehicular and pedestrian gates with locks.

C. Provide covered walkways as required by governing authorities for public rights-of-way and for public access to existing buildings.

D. Provide barriers around trees and plants designated to remain. Protect against vehicular traffic, materials' dumping, chemically injurious materials, puddling or running water.

E. Provide temporary, insulated, weathertight closures at openings to the exterior to provide acceptable working conditions and protection for materials, to allow for temporary heating and to prevent entry of unauthorized persons. Provide doors with self-closing hardware and locks.

F. Barriers and enclosures shall be in conformance with code requirements. Do not block egress from occupied buildings unless necessary to further the work of the Contract. In this case, secure the Department's approval of an alternate egress plan.

01545 PROTECTION

A. Protect buildings, equipment, furnishings, grounds and plantings from damage. Any damage shall be repaired or otherwise made good at no expense to the Owner.

B. Provide protective coverings and barricades to prevent damage. The Contractor shall be held responsible for, and must make good at its own expense, any water or other type of damage due to improper coverings. Protect the public and building personnel from injury.

C. Provide temporary protection for installed products. Control traffic in immediate area to minimize damage.

D. Provide protective coverings for walls, projections, jambs, sills and soffits of openings. Protect finished floors and stairs from traffic, movement of heavy objects and storage. Prohibit traffic and storage on waterproofed and roofed surfaces and on lawn and landscaped areas.

E. Provide temporary partitions and ceilings to separate work areas from Owner-occupied areas to prevent penetration of dust and moisture into Owner-occupied areas and equipment. Erect framing and sheet materials with closed joints and sealed edges at intersections with existing surfaces.

01550 SECURITY

A. Provide security program and facilities to protect work, existing facilities and Owner's operations from unauthorized entry, vandalism and theft. Coordinate with Owner's security program.

B. The Contractor shall be solely responsible for damage, loss or liability due to theft or vandalism.

01555 TRAFFIC WAYS

A. The Contractor may use on-site paved roads and parking areas but shall not encumber same or their access. Public highways shall not be blocked by standing trucks, parked cars, material storage, construction operations or in any other manner.

B. Public roads and existing paved roads, drives and parking areas shall be kept free from scrap or debris due to construction operations and any damage to their surface caused by the Contractor shall be repaired by him at its own expense. The Contractor shall apply water and calcium chloride to unpaved areas and shall apply water and use vacuum sweeper on paved areas, or use other methods subject to the Engineer's approval for keeping airborne dust to a minimum

C. If the work of the Contract affects public use of any street, road, highway or thoroughfare, the General Contractor shall confer with the police authority having jurisdiction to determine if and how many police are needed for public safety in addition to any barriers and signals that may be needed. The General Contractor will be responsible for payment of any needed police services.

01570 CLEANING

A. Maintain areas under Contractor's control free of waste materials, debris and rubbish. Maintain in a clean and orderly condition.

B. Execute cleaning during progress of the Work, at completion of the Work, and as required by the General Conditions.

C. Control cleaning operations so that dust and other particulates will not adhere to wet or newly-coated surfaces and so that dust, wash water or other contaminants generated during such operations do not damage or mar painted or finished surfaces.

D. Remove waste materials, debris and rubbish from site daily and dispose of legally off-site. No scrap/debris shall remain inside the building or anywhere on site upon final acceptance of the project.

E. Requirements of Regulatory Agencies:

1. In addition to the requirements herein, maintain the cleanliness of the Work and surrounding premises within the Work limits so as to comply with federal, state, and local fire and safety laws, ordinances, codes and regulations.

2. Comply with all federal, state and local anti-pollution laws, ordinances, codes and regulations when disposing of waste materials, debris and rubbish.

F. Cleaning Materials:

1. Use only cleaning materials recommended by manufacturer of surface to be cleaned.

2. Use each type of cleaning material on only those surfaces recommended by the cleaning material manufacturer.

3. Use only materials which will not create hazards to health or property.

G. During Construction:

1. Keep the Work and surrounding premises within work limits free of accumulations of dirt, dust, waste materials, debris and rubbish.

2. Keep dust generating areas wetted down.

3. Provide suitable containers for storage of waste materials, debris and rubbish until time of disposal.

4. Dispose of waste, debris and rubbish off site at legal disposal areas.

H. When Project is Completed:

1. Remove and dispose of all excess or waste materials, debris, rubbish, and temporary facilities from the site, structures and all facilities.

2. Repair pavement, roads, sod, and all other areas affected by construction operations and restore them to original condition or to minimum condition specified.

3. Remove spatter, grease, stains, fingerprints, dirt, dust, labels, tags, packing materials and other foreign items or substances from interior and exterior surfaces, equipment, signs and lettering.

4. Repair, patch and touch up chipped, scratched, dented or otherwise marred surfaces to match specified finish.

5. Remove paint, clean and restore all equipment and material nameplates, labels and other identification markings.

6. Wash and shine mirrors, glazing and polished surfaces.

7. Clean all floors, slabs, pavements, and ground surfaces.

8. Maintain cleaning until acceptance and occupation by Owner.

01575 PROJECT SIGNS

A. Project Signs: The Contractor shall not post any signs.

01580 FIELD OFFICES AND SHEDS ~

A. Field Offices

1. The Contractor may provide an office for its own use which may be a trailer type facility with electric lighting, air conditioning, and heat. Contractor shall receive approval from Owner prior to locating the office trailer. It shall have ample natural light, a table, chairs, counter, shelf, plan racks and file cabinets. Provide a 5 Ib. ABC fire extinguisher and an OSHA-approved first aid kit.

01600 MATERIALS AND EQUIPMENT CONTROLS

A. Materials and Equipment

Shall be delivered, stored and handled to prevent intrusion of foreign matter and damage by weather or breakage. Packaged materials shall be delivered and stored in original, unbroken packages.

1. Promptly inspect shipments to assure that products comply with requirements, that quantities are correct and products are undamaged.
2. Packages, materials and equipment showing evidence of damage will be rejected and replaced at no additional cost to the Owner.

B. Storage and Protection

1. Store products in accordance with manufacturers' instructions with seals and labels intact and legible. Store sensitive products in weathertight enclosures; maintain within temperature and humidity range required by manufacturer.
2. For exterior storage of fabricated products, place on sloped supports above ground. Cover products subject to deterioration with impervious sheet covering; provide ventilation to avoid condensation.
3. Store loose granular material on solid surfaces in a well-drained area; prevent mixing with foreign matter.
4. Arrange storage to provide access for inspection. Periodically inspect to insure products are undamaged and are maintained under required conditions. Keep log showing date, time and problems, if any.
5. Stone, masonry units and similar materials shall be stored on platforms or dry skids and shall be adequately covered and protected against damage.

01631 EQUALS AND SUBSTITUTIONS

A. Definitions

Definitions in this Article do not change or modify the meaning of other terms used in the Contract Documents.

1. Equals or Substitutions General: Changes in products, materials, equipment, and methods of construction required by the Contract Documents proposed by the Contractor after award of the Contract.
2. Equal: Any deviation from the specification which is defined as follows: A replacement for the specified material, device, procedure, equipment, etc., which is recognized and accepted as substantially equal to the first listed manufacturer or first listed procedure specified, after review, by the Engineer and may be rejected or approved at the sole discretion of the owner. All equals

must be substantially equivalent to the first manufacturer or first procedure listed in the Specifications with reference to all of the following areas: the substance and function considering quality, workmanship, economy of operation, durability and suitability for purposes intended; size, rating and cost. The equal does not constitute a modification in the scope of Work, the Schedule or Engineer's design intent of the specified material, device, procedure, equipment, etc.

3. Substitution: Any deviation from the specified requirements, which is defined as follows: A replacement for the specified material, device, procedure, equipment, etc., which is not recognized or accepted as equal to the first manufacturer or procedure listed in the Specification after review by the Engineer and may be rejected or approved by the Owner. The Substitution is not equal to the specified requirement in comparison to the first manufacture or first procedure listed in the Specifications in one or more of the following areas: the substance and function considering quality, workmanship, economy of operation, durability and suitability for purposes intended; size; cost and rating. The Substitution constitutes a modification in the scope of Work, the Schedule or the Engineer's design intent of the specified material, device, procedure, equipment, etc.

4. The following are not considered to be requests for Equals or Substitutions:

   a. Revisions to the Contract Documents requested by the Owner or Engineer.

   b. Specified options of products and construction methods included in the Contract Documents.

   c. The Contractor's determination of and compliance with governing regulations and orders issued by governing authorities having jurisdiction.

B. Submittals

1. Equals and Substitution Request Submittals: The Owner will consider requests for equals or substitutions if received within time period designated in the General Conditions Article 15. Requests received more than the days specified in Article 15 after the start date of the contract will be rejected.

   a. The Contractor is required to prepare and submit 3 copies of the required data for the first manufacturer listed or procedure listed in the specifications section with reference to all of the following areas: the substance and function considering quality, workmanship, economy of operation, durability and suitability for purposes intended including the size, rating and cost. All submissions must include all the required data for the first listed manufacturer or procedure as specified, as well as the required data for the proposed Equal or Substitution. This will enable the Owner and Engineer to determine that the proposed Equal or Substitution is or is not substantially equal to the first listed manufacturer or procedure.

2. Identify the product or the fabrication or installation method to be replaced in each request. Include related Specification Section and Drawing numbers.

3. Provide complete documentation showing compliance with the requirements for equals or substitutions, and the following information, as appropriate on a "Substitution Request" form as required by the Owner:

   a. Coordination information, including a list of changes or modifications needed to other parts of the Work and to construction performed by the Owner and separate contractors, that will be necessary to accommodate the proposed Equal or Substitution.

   b. A detailed comparison chart of significant qualities of the proposed substitution with those of the Work specified. Significant qualities may include elements, such as performance, weight, size, durability, and visual effect.

   c. Product Data, including Shop Drawings and descriptions of products and fabrication and installation procedures.

   d. Samples, where applicable or requested.

e. A statement indicating the effect on the Contractor's Construction Schedule or CPM Schedule compared to the schedule without approval of the Equal or Substitution. Indicate the effect on overall Contract Time.

f. Cost information, broken down, including a proposal of the net change, if any in the Contract Sum.

g. The Contractor's certification that the proposed Equal or Substitution conforms to requirements in the Contract Documents in every respect and is appropriate for the applications indicated.

h. The Contractor's waiver of rights to additional payment or time that may subsequently become necessary because of the failure of the Equal or Substitution to perform adequately.

4. Engineer's Action: If necessary, the Engineer will request additional information or documentation for evaluation within one week of receipt of the original request for equal or substitution request. The Engineer will notify the Owner of recommended acceptance or rejection of the proposed equal or substitution, within one (1) week of receipt of the request, or one (1) week of receipt of additional information or documentation, whichever is later. The Engineer will give final acceptance or rejection by the Owner not less than one (1) week after notification.

   a. Any request deemed an "Equal" and accepted by the Engineer, and Owner will result in written notification to the Contractor and will not be in the form of a change order for an "Equal".

   b. Any request deemed a "Substitution" and rejected or approved by Engineer and Owner may result in written notification to the Contractor and may be in the form of a change order if the "Substitution" is approved.

C. Equal or Substitutions

1. Conditions: The Engineer will consider the Contractor's request for Equal or Substitution of a product or method of construction when one or more of the following conditions are satisfied, as determined by the Engineer. If the following conditions are not satisfied, the Engineer will return the requests to the Engineer without action except to record noncompliance with these requirements.

   a. The proposed request does not require extensive revisions to the Contract Documents.

   b. The proposed request is in accordance with the general intent of the Contract Documents.

   c. The proposed request is timely, fully documented, and/or properly submitted.

   d. The proposed request can be provided within the Contract Time. However, the Engineer will not consider the proposed request if it is a result of the Contractor's failure to pursue the Work promptly or coordinate activities properly.

   e. The proposed request will offer the Owner a substantial advantage, in cost, time, energy conservation, or other considerations, after deducting additional responsibilities the Owner must assume. However, if the proposed request requires the Owner to incur additional responsibilities, including but not limited to, additional compensation to the Engineer for redesign and evaluation services, increased cost of other construction by the Owner or similar considerations, then the Owner will have just cause to reject the request for Equal or Substitution.

   f. The proposed request can receive the necessary approvals, in a timely manner, required by governing authorities having jurisdiction.

   g. The proposed request can be provided in a manner that is compatible with the Work as certified by the Contractor.

   h. The proposed request can be coordinated with the Work as certified by the Contractor.

i. The proposed request can uphold the warranties required by the Contract Documents as certified by the Contractor.

2. The Contractor's submission and the Engineer's review of Submittals, including but not limited to, Samples, Manufacturer's Data, Shop Drawings, or other such items, which are not clearly identified as a request for an Equal or Substitution, will not be considered or accepted as a valid request for an Equal or Substitution, nor does it constitute an approval.

01650 STARTING OF SYSTEMS

A. General:

1. Coordinate schedule for start-up of various equipment and systems.
2. Provide written notification the Engineer thirty (30) Calendar Days prior to start-up of each item.
3. Verify that each piece of equipment or system has been checked for proper lubrication, drive rotation, belt tension, and control sequence for other conditions that may cause damage.
4. Verify that tests, meter readings, and specified electrical characteristics agree with those required by the equipment or system manufacturer.
5. Verify in wiring and support components are complete and tested.
6. Execute the start-up under supervision of manufacturer's representative, in accordance with manufacturer's instructions.
7. When referenced in individual specification sections, require manufacturer to provide an authorized representative to be present at the site to inspect, check, and approve equipment or system installation prior to start-up, and to supervise placing equipment or system in operation.
8. Submit a written report in accordance Section 01400 "Quality Control" that the equipment or system has been properly installed and is functioning properly.

B. Demonstration and Instructions:

1. Demonstrate operation and maintenance of Products to Owner and Personnel two (2) weeks prior to substantial completion.
2. Demonstrate Project equipment and instruct in a classroom environment at location designated by the Engineer and instructed by a qualified manufacturer's representative who is knowledgeable about the project.
3. For equipment or systems requiring seasonal operation perform demonstration for season within six (6) months.
4. Utilize operation and maintenance manuals as basis for instruction. Review contents of manual with Owner and Personnel in detail to explain all aspects of operation and maintenance.
5. Demonstrate start-up, operation, control, adjustment, troubleshooting, servicing, and maintenance, and shutdown of each item at agreed upon scheduled time and at equipment or designated location.
6. Prepare and insert additional data in operations and maintenance manuals when need for additional data becomes apparent during demonstration.

C. Testing Adjusting, and Balancing

1. The Contractor will employ and pay for the testing services of an independent consultant to verify the testing, adjusting, and balancing.
2. Reports will be submitted by the independent testing consultant to the Engineer indicating observations and results of tests and indicating compliance or non-compliance with the requirements of the Contract Documents.

3. The Owner may employ and pay for the services of an independent consultant to verify testing, adjusting, and balancing which was performed by the Contractor.

01700 CONTRACT CLOSEOUT

A. Request for Acceptance of Project by Owner

1. Preliminary Procedures: Before requesting acceptance of the project by the Owner, complete the following. List exceptions in the request.
    a. Include supporting documentation for completion as indicated in these Contract Documents and a statement showing an accounting of changes to the Contract Sum.
    b. If 100 percent completion cannot be shown, include a list of incomplete items, the value of incomplete construction, and reasons the Work is not complete.
    c. Advise the Owner of pending insurance changeover requirements, if applicable.
    d. Submit specific warranties, workmanship bonds, maintenance agreements, final certifications, and similar documents.
    e. Obtain and submit releases enabling the Owner unrestricted use of the Work and access to services and utilities. Include occupancy permits, operating certificates, and similar releases.
    f. Submit record drawings, maintenance manuals, damage or settlement surveys, property surveys, and similar final record information.
    g. Deliver tools, spare parts, extra stock, and similar items.
    h. Make final changeover of permanent locks and transmit keys to the Owner. Advise the Owner's personnel of changeover in security provisions.
    i. Demonstration, through operation and testing, the functions of all systems and/or equipment to the satisfaction of the Owner for compliance to the contract. Complete testing of systems, and instruction of the Owner's operation and maintenance personnel. Discontinue and remove temporary facilities from the site, along with mockups, construction tools, and similar elements.
    j. Complete final cleanup requirements, including touchup painting,
    k. Touch up and otherwise repair and restore marred, exposed finishes.
2. Inspection Procedures: The Contract shall be ready and prepared when they request a Substantial Completion inspection. If the inspection reveals that the work is not complete, there are extensive punchlist items and as the items listed above are not complete, the Engineer and Owner will determine the inspection has failed.
3. The Contractor is responsible for all costs to re-inspect due to a failed inspection. The Owner will issue a deduct change order to cover all costs for re-inspection.
    a. The Engineer will repeat inspection when requested and assured that the Work is substantially complete.
    b. Results of the completed inspection will form the basis of requirements for final acceptance.

B. Final Payment

1. Preliminary Procedures: When requesting final payment, complete the following. List exceptions in the request.
    a. Receive written documentation of Acceptance by Owner.

b. Submit the final payment request with releases and supporting documentation not previously submitted and accepted. Include insurance certificates for products and completed operations where required.

c. Submit an updated final statement, accounting for final additional changes to the Contract Sum.

d. Submit a certified copy of the Engineer's final inspection list of items to be completed or corrected, endorsed and dated by the Engineer. The certified copy of the list shall state that each item has been completed or otherwise resolved for acceptance and shall be endorsed and dated by the Engineer.

e. Submit final meter readings for utilities, a measured record of stored fuel, and similar data as of the date of Substantial Completion or when the Owner took possession of and assumed responsibility for corresponding elements of the Work.

f. Submit consent of surety to Final Payment.

g. Submit evidence of final, continuing insurance coverage complying with insurance requirements, if applicable.

2. Reinspection Procedure: The Inspection Group will re-inspect the Work upon receipt of notice from the Engineer that the Work, including inspection list items from earlier inspections, has been completed, except for items whose completion is delayed under circumstances acceptable to the Owner.

a. Upon completion of reinspection, the Engineer will prepare a certificate of final acceptance. If the Work is incomplete, the Engineer will advise the Contractor of Work that is incomplete or of obligations that have not been fulfilled but are required for final acceptance.

C. Record Document Submittals

1. General

Do not use record documents for construction purposes. Protect Record Documents from deterioration and loss in a secure, fire-resistant location. Provide access to record documents for the Engineer's reference during normal working hours. Keep documents current; do not permanently conceal any work until required information has been recorded. Failure to keep documents current is sufficient cause to withhold progress payments.

a. The Record Drawings shall be prepared upon completion of the work and in accordance with Section 01050 and copies submitted to the Owner as required in Section 01700.

2. Record Drawings

The Contractor shall maintain one clean, complete undamaged set of blue or black line whiteprints of Contract Drawings and Shop Drawings. Mark the set to show the actual installation where the installation varies substantially from the Work as originally shown. Mark which drawing is most capable of showing conditions fully and accurately. Where Shop Drawings are used, record a cross-reference at the corresponding location on the Contract Drawings. Give particular attention to concealed elements that would be difficult to measure and record at a later date.

a. Mark record sets with erasable pencil to distinguish between variations in separate categories of the Work.

b. Mark all new information that is not shown on Contract Drawings.

c. Note related change-order numbers where applicable.

d. Organize record drawing sheets into manageable sets. Bind sets with durable-paper cover sheets; print suitable titles, dates, and other identification on the cover of each set.

e. Upon completion of the work, the Contractor shall submit Record Drawings to the Engineer.

3. Record Specifications

The Contractor shall maintain one complete copy of the Project Manual, including Addenda. Include with the Project Manual one copy of other written construction documents, such as Change Orders and modifications issued in printed form during construction.

a. Mark these documents to show substantial variations in actual Work performed in comparison with the text of the Specifications and modifications.

b. Give particular attention to equals and substitutions and selection of options and information on concealed construction that cannot otherwise be readily discerned later by direct observation.

c. Note related record drawing information and Product Data.

d. Upon completion of the Work, submit record Specifications to the Engineer for the Owner's records.

4. Record Product Data

The Contractor shall maintain one copy of each Product Data submittal. Note related Change Orders and markup of record drawings and Specifications.

a. Mark these documents to show significant variations in actual Work performed in comparison with information submitted. Include variations in products delivered to the site and from the manufacturer's installation instructions and recommendations.

b. Give particular attention to concealed products and portions of the Work that cannot otherwise be readily discerned later by direct observation.

c. Upon completion of markup, submit complete set of Record Product Data to the Engineer for the Owner's records.

5. Record Sample Submitted

Immediately prior to Substantial Completion, the Contractor shall meet with the Engineer and the Owner's personnel at the Project Site to determine which Samples are to be transmitted to the Owner for record purposes. Comply with the Owner's instructions regarding delivery to the Owner's Sample storage area.

6. Miscellaneous Record Submittals

Refer to other Specification Sections for requirements of miscellaneous record keeping and submittals in connection with actual performance of the Work. Immediately prior to the date or dates of Substantial Completion, complete miscellaneous records and place in good order. Identify miscellaneous records properly and bind or file, ready for continued use and reference. Submit to the Engineer for the Owner's records.

7. Maintenance Manuals

Organize operation and maintenance data into suitable sets of manageable size. Bind properly indexed data in individual, heavy-duty, 2-inch (51-mm), 3-ring, vinyl-covered binders, with pocket folders for folded sheet information. Mark appropriate identification on front and spine of each binder according to section 01730. Included but not limited to the following types of information:

a. Emergency instructions.

b. Spare parts list.

c. Copies of warranties.

d. Wiring diagrams.

e. Recommended “turn-around” cycles.

f. Inspection procedures.

g. Shop Drawings and Product Data.

h. Fixture lamping schedule.

D. Closeout Procedures

1. Operation and Maintenance Instructions: Arrange for each Installer of equipment that requires regular maintenance to meet with the Owner’s personnel to provide instruction in proper operation and maintenance. Provide instruction by manufacturer’s representatives if installers are not experienced in operation and maintenance procedures. Include a detailed review of the following items:

   a. Maintenance manuals.

   b. Record documents.

   c. Spare parts and materials.

   d. Tools.

   e. Lubricants.

   f. Fuels.

   g. Identification systems.

   h. Control sequences.

   i. Hazards.

   j. Cleaning.

   k. Warranties and bonds.

   l. Maintenance agreements and similar continuing commitments.

2. As part of instruction for operating equipment, demonstrate the following procedures:

   a. Startup.

   b. Shutdown.

   c. Emergency operations.

   d. Noise and vibration adjustments.

   e. Safety procedures.

   f. Economy and efficiency adjustments.

   g. Effective energy utilization.

E. Final Cleaning

1. General: The General Conditions requires general cleaning during construction. Regular site cleaning is included in Division 1 Section 01570 “Cleaning”“.

2. Comply with manufacturer’s instructions. Complete the following cleaning operations before requesting inspection for Certification of Substantial Completion.

3. Exterior:

   a. Clean the site, including landscape development areas, of rubbish, litter, and other foreign substances. Sweep paved areas broom clean; remove stains, spills, and other foreign deposits. Rake grounds that are neither paved nor planted, to a smooth, even-textured surface.

b. Clean exposed exterior hard-surfaced finishes to a dust-free condition, free of stains, films, and similar foreign substances

c. Clean roofs, gutters and downspouts.

d. Remove waste and surplus materials, rubbish and construction equipment and facilities from the site, and deposit it legally elsewhere.

e. Clean transparent materials, including mirrors and glass in doors and windows. Remove glazing compounds and other substances that are noticeable vision-obscuring materials. Replace chipped or broken glass and other damaged transparent materials. Remove paint spots; wash and polish glass.

4. Removal of Protection: Remove temporary protection and facilities installed for protection of the Work during construction.

5. Compliance: Comply with regulations of authorities having jurisdiction and safety standards for cleaning. Do not burn waste materials. Do not bury debris or excess materials on the Owner's property, unless authorized by Owner. Do not discharge volatile, harmful, or dangerous materials into drainage systems. Remove waste materials from the site and dispose of lawfully, unless authorized by Owner to leave on-site.

a. Where extra materials of value remain after completion of associated Work, they become the Owner's property. Dispose of these materials as directed by the Engineer.

b. If the Contractor fails to clean up, the Owner may do so, with the cost charged to the Contractor. The Owner will issue a credit change order to cover the costs.

01730 OPERATION AND MAINTENANCE DATA

A. The Contractor shall instruct the Owner's designated personnel in the operation of new equipment and shall provide manuals and if required, provide video tapes of this basic maintenance of the equipment for training purposes. Provide qualified personnel for as long as necessary to instruct the Owner's personnel.

B. Submit two (2) copies of the manuals in 3-ring, loose-leaf notebooks to the Engineer for approval. Manuals may consist of plain paper copies of approved shop drawings and catalog cuts. Upon completion and approval, one copy will be forwarded to the Owner and one copy retained by the Engineer.

C. Manuals shall include:

1. Operating Procedures:

a. Typewritten procedures for each mode of operation of each piece of equipment. Procedures shall indicate the status of each component of a system in each operating mode.

b. Procedures shall include names, symbols, valve tags, circuit numbers, schematic wiring diagrams, locations of thermostats, manual starters, control cabinets and other controls of each system.

c. Emergency shut-down procedures for each piece of equipment or system, both automatic and manual, as appropriate.

2. Maintenance Schedule:

a. Typewritten schedule describing manufacturers schedule of maintenance and maintenance procedures.

3. Catalog Cuts:

a. To illustrate each piece of installed equipment, including options.

b. Include equipment descriptions including physical, electrical and mechanical; performance characteristics; installation or erection diagrams.

c. Include spare parts numbers and names, address and phone number of manufacturer; name, address and phone number of local representative or service department.

d. Typewritten list of all subcontractors on the project, including name, address and phone number of local representative or service department.

4. Manuals shall be indexed with dividers indicating each system or piece of equipment.

01740 WARRANTIES AND GUARANTEES

A. Disclaimers and Limitations: Manufacturer's disclaimers and limitations on product warranties do not relieve the Contractor of the warranty on the Work that incorporates the products. Manufacturer's disclaimers and limitations on product warranties do not relieve suppliers, manufacturers, and subcontractors required to countersign special warranties with the Contractor.

B. Related Damages and Losses: When correcting failed or damaged warranted construction, remove and replace construction that has been damaged as a result of such failure or must be removed and replaced to provide access for correction of warranted construction.

C. Reinstatement of Warranty: When Work covered by a warranty has failed and been corrected by replacement or rebuilding, reinstate the warranty by written endorsement. The reinstated warranty shall be equal to the original warranty with an equitable adjustment for depreciation.

D. Replacement Cost: Upon determination that Work covered by a warranty has failed, replace or rebuild the Work to an acceptable condition complying with requirements of the Contract Documents. The Contractor is responsible for the cost of replacing or rebuilding defective Work regardless of whether the Owner has benefited from use of the Work through a portion of its anticipated useful service life.

E. Owner's Recourse: Expressed warranties made to the Owner are in addition to implied warranties and shall not limit the duties, obligations, rights, and remedies otherwise available under the law. Expressed warranty periods shall not be interpreted as limitations on the time in which the Owner can enforce such other duties, obligations, rights, or remedies.

1. Rejection of Warranties: The Owner reserves the right to reject warranties and to limit selection to products with warranties not in conflict with requirements of the Contract Documents.

F. Where the Contract Documents require a special warranty, or similar commitment on the Work or part of the Work, the Owner reserves the right to refuse to accept the Work, until the Contractor presents evidence that entities required to countersign such commitments are willing to do so.

G. The Contractor shall guarantee all materials and workmanship for a period of twelve months from the Acceptance Date. In addition, the Contractor shall furnish warranties in the supplier's standard form or in the form given below if there is no standard form available.

H. Submit certification that finish materials are fire rated as specified.

I. Form of Guarantees and Warranties:

MATERIALS INNOVATION AND RECYCLING AUTHORITY
Project Number [Insert No. Here])

I (We) hereby guarantee and warranty the work on the referenced project for a period of_____ years from_____, 20__ against failures of workmanship and materials in accordance with the requirements of Section __, Page __, Paragraph__, of the Specifications.

Signed _____

General Contractor (or authorized agent) _____

J. Bonds shall be by approved Surety Companies, made out to the Owner on company's standard form.

K. Guarantees, warranties or bonds supplied by Subcontractors, Suppliers or Manufacturers shall reference the project name, number, and location and be certified by the General Contractor to be for the product and installation on the project and must be countersigned by the General Contractor.

L. Submittals:

1. Submit written warranties prior to the date certified for Substantial Completion. If the Engineer's Certificate of Substantial Completion designates a commencement date for warranties other than the date of Substantial Completion for the Work, or a designated portion of the Work, submit written warranties upon request of the Engineer.

2. Forms for special warranties are included in this Section. Prepare a written document utilizing the appropriate form, ready for execution by the Contractor, or by the Contractor, subcontractor, supplier, or manufacturer. Submit a draft to the Owner, through the Engineer, for approval prior to final execution.

    a. Refer to Divisions the Technical Specifications for specific content requirements and particular requirements for submitting special warranties.

3. Form of Submittal: At Final Completion compile two (2) copies of each required warranty properly executed by the Contractor, or by the Contractor, subcontractor, supplier, or manufacturer. Organize the warranty documents into an orderly sequence based on the table of contents of the Project Manual.

4. Bind warranties and bonds in heavy-duty, commercial-quality, durable 3-ring, vinyl-covered loose-leaf binders, thickness as necessary to accommodate contents, and sized to receive 8-1/2-by-11-inch (115-by-280-mm) paper.

    a. Provide heavy paper dividers with celluloid covered tabs for each separate warranty. Mark the tab to identify the product or installation. Provide a typed description of the product or installation, including the name of the product, and the name, address, and telephone number of the Installer.

    b. Identify each binder on the front and spine with the typed or printed title "WARRANTIES," Project title or name, and name of the Contractor.

When warranted construction requires operation and maintenance manuals, provide additional copies of each required warranty, as necessary, for inclusion in each required manual.

EXHIBIT C: SPECIFICATIONS

Attached hereto and incorporated herein this Exhibit C is the Specification Package for the Medium Voltage Interconnection from MIRA PV to Hartford DPW as prepared by Fuss & O'Neill.

Medium Voltage Interconnection from MIRA PV to Hartford DPW

50 Jennings Road

Materials Innovation and Recycling Authority
Hartford, CT

June 2015

FUSS & O'NEILL

146 Hartford Road
Manchester, CT 06040

THIS PAGE IS INTENTIONALL□ LE□T □LAN□

□□OR DUPLE□ PRINTING PURPOSES□

STATE SEALS

ELECTRICAL

John Michael Callahan
CT License # PEN.0014118
Fuss & O'Neill, Inc.
146 Hartford Road
Manchester, CT 06040

THIS PAGE IS INTENTIONALL LE T LAN

OR DUPLE PRINTING PURPOSES

Section No.	Title	No. of Pages

SECTION 00 01 10 - TABLE OF CONTENTS

PROCUREMENT AND CONTRACTING REQUIREMENTS GROUP

DIVISION 00 – PROCUREMENT AND CONTRACTING REQUIREMENTS

INTRODUCTORY INFORMATION

00 01 01 Project Title Page 2

00 01 07 Seals Page 2

00 01 10 Table of Contents 4

00 01 15 List of Drawing Sheets 2

SPECIFICATIONS GROUP

GENERAL REQUIREMENTS SUBGROUP

DIVISION 01 – GENERAL REQUIREMENTS

01 10 00 Summary 6

01 32 33 Photographic Documentation 2

01 57 13 Temporary Erosion and Sediment Control 6

FACILITY CONSTRUCTION SUBGROUP

DIVISION 02 – EXISTING CONDITIONS

02 41 19 Selective Demolition 6

DIVISION 26 – ELECTRICAL

26 05 05 Common Electrical Requirements 8

26 05 19 Power Conductors 4

26 05 26 Grounding and Bonding 4

26 05 33 Raceway and Boxes 10

Section No.	Title	No. of Pages
26 05 43	Underground Ducts and Raceways for Electrical Systems	8
26 05 53	ID for Electrical Systems	6
26 12 00	Medium Voltage Transformers	6
26 22 00	Low Voltage Transformers	6
26 24 16	Panelboards	10
DIVISION 31 – EARTHWORK		
31 10 00	Site Clearing	6
DIVISION 33 – UTILITIES		
33 71 49	Overhead Electrical Distribution	8

END OF SECTION

SECTION 00 01 15 – LIST OF DRAWINGS

SHEET NUMBER	SHEET TITLE
CU-101	Electrical Site Plan
CU-102	Partial Site Plan, Schedule and Detail
E-101	Electrical One Line Diagram
CU-501	Site Details
CU-502	Site Details

END OF SECTION

THIS PAGE IS INTENTIONALL LE T LAN

OR DUPLE PRINTING PURPOSES

SECTION 01 10 00 - SUMMARY

PART 1 - GENERAL

1.1 Related Documents

A. Drawings and general provisions of the Contract, including General and Supplementary Conditions and other Division 01 Specification Sections, apply to this Section.

1.2 Project Information

A. Project Identification: Medium Voltage Interconnection from MIRA PV to Hartford DPW.
   1. Project Location: Jennings and Fisher Road, Hartford, CT.

B. Owner: Material Innovations and Recycling Authority (MIRA).
   1. Owner's Representative:
      David Bodendorf, P.E.
      Materials Innovation and Recycling Authority
      100 Constitution Plaza
      Hartford, CT 06103
      860-757-7721

C. Engineer:
      J. Michael Callahan P.E.
      Fuss & O'Neill, Inc.
      146 Hartford Road
      Manchester, CT 06040
      (860) 646-2469 ext. 5300.

1.3 Work Covered By Contract Documents

A. The Work of Project is defined by the Contract Documents and consists of the installation of 13.8 kV overhead and underground transmission lines from MIRA PV system to Hartford DPW. Distribution cabling support shall include:
   1. Installation of pole extension on existing poles
   2. Installation of new poles
   3. Installation of Triplex transmission lines
   4. Installation of concrete ductbank for underground cabling
   5. Removal of excavated materials
   6. Removal of select trees along proposed transmission route
   7. Removal of the existing REC meter
   8. Installation of 500kva pad mounted transformer on existing pad
   9. Coordination with Eversource for REC Metering

10. Coordination with Eversource for DPW revenue meter and transformer removal
11. Coordination with MIRA, CTDEEP, and the City of Hartford for construction and planned power outages
12. Installation of exterior enclosure, power panel and communication equipment
13. Connection of Hartford DPW service to new pad mounted transformer

B. Type of Contract:
1. Project will be constructed under a single prime contract.

1.4 Work By Owner

A. General: Cooperate fully with Owner so work may be carried out smoothly, without interfering with or delaying work under this Contract or work by Owner. Coordinate the Work of this Contract with work performed by Owner.

B. Concurrent Work: Owner will perform the following construction operations at Project site. Those operations will be conducted simultaneously with work under this Contract:
1. Installation of communication router and wireless modem.

C. Concurrent Work: Retain "Subsequent Work" Paragraph below if future work to be performed by Owner depends on successful completion of work performed under this Contract. Revise to suit Project. See Evaluations for model text.

1.5 Allowances

Allowance No. 1- Lump-Sum Allowance: Utility Company will perform the following construction operations at Project site as part of the contract. Those operations will be conducted simultaneously with work under this Contract and coordinated by contractor.
1. Removal of Hartford DPW pad mounted transformer and utility metering
2. Installation of new REC Meter

Include the sum of $14,000 for charges from Eversource for removal of the transformer and the installation of REC Meter. Installation shall include all labor and materials for complete operation of REC Meter.

B. Allowance No. 2: Lump-Sum Allowance: Include the sum of $4,000 for transportation and disposal of excavated materials and pavement. This allowance is to cover the cost of transportation and disposal of excavated materials and pavement that are either in excess of those that can be reused or that are unsuitable for reuse.

1.6 Access To Site

A. General: Contractor shall have limited use of Project site for construction operations and shall carefully coordinate all activities with MIRA and the City of Hartford.

1.7 Coordination With Occupants

A. Full Owner Occupancy: The City of Hartford will occupy the site and DPW building during entire construction period. Cooperate with MIRA and the City of Hartford during construction operations to minimize conflicts and facilitate MIRA and the City of Hartford's usage. Perform the Work so as not to interfere with MIRA and the City of Hartford's day-to-day operations.
   1. Maintain access to existing roadways, buildings, firing range, walkways, corridors, and other adjacent occupied or used facilities. Do not close or obstruct walkways, corridors, or other occupied or used facilities without written permission from MIRA and the City of Hartford and approval of authorities having jurisdiction.
   2. Notify Owner not less than 72 hours in advance of activities that will affect MIRA and the City of Hartford's operations.

B. Prior to starting the work, provide MIRA and the City of Hartford with a formal, written draft construction schedule. The schedule shall demonstrate minimal interruptions to MIRA and the City of Hartford's operations and clearly delineates the date, time and duration of power outages and other disruptive activities. Make all adjustments to the schedule as requested by MIRA and/or the City of Hartford's. MIRA and the City of Hartford shall approve the schedule prior to start of work.

1.8 Work Restrictions

A. Work Restrictions, General: Comply with restrictions on construction operations.
   1. Comply with limitations on use of public streets and with other requirements of authorities having jurisdiction.

B. On-Site Work Hours: Limit work in the existing building to normal business working hours of 7:00 a.m. to 5:00 p.m., Monday through Friday, unless otherwise indicated.

C. Existing Utility Interruptions: Do not interrupt utilities serving facilities occupied by MIRA and the City of Hartford or others unless permitted under the following conditions and then only after providing temporary utility services according to requirements indicated:
   1. Notify MIRA and the City of Hartford not less than **5** days in advance of proposed utility interruptions.
   2. Obtain MIRA and the City of Hartford's written permission before proceeding with utility interruptions.

D. Nonsmoking Building: Smoking is not permitted anywhere on the site or within the buildings.

E. Controlled Substances: Use of tobacco products and other controlled substances on Project site is not permitted.

F. Employee Identification: Provide identification tags for Contractor personnel working on Project site. Require personnel to use identification tags at all times.

G. Employee Screening: Comply with Owner's requirements for drug and background screening of Contractor personnel working on Project site.
   1. Maintain list of approved screened personnel with Owner's representative.

1.9 Specification And Drawing Conventions

A. Specification Content: The Specifications use certain conventions for the style of language and the intended meaning of certain terms, words, and phrases when used in particular situations. These conventions are as follows:
   1. Imperative mood and streamlined language are generally used in the Specifications. The words "shall," "shall be," or "shall comply with," depending on the context, are implied where a colon (:) is used within a sentence or phrase.
   2. Specification requirements are to be performed by Contractor unless specifically stated otherwise.

B. Division 01 General Requirements: Requirements of Sections in Division 01 apply to the Work of all Sections in the Specifications.

C. Drawing Coordination: Requirements for materials and products identified on Drawings are described in detail in the Specifications. One or more of the following are used on Drawings to identify materials and products:
   1. Terminology: Materials and products are identified by the typical generic terms used in the individual Specifications Sections.
   2. Keynoting: Materials and products are identified by reference keynotes referencing Specification Section numbers found in this Project Manual.

PART 2 - PRODUCTS (Not Used)

PART 3 - EXECUTION (Not Used)

END OF SECTION

SECTION 01 32 33 - PHOTOGRAPHIC DOCUMENTATION

PART 1 - GENERAL

1.1 Related Documents

A. Drawings and general provisions of the Contract, including General and Supplementary Conditions and other Division 01 Specification Sections, apply to this Section.

1.2 Summary

A. Section includes administrative and procedural requirements for the following:
   1. Preconstruction photographs.
   2. Periodic construction photographs.
   3. Final completion construction photographs.

1.3 Informational Submittals

A. Key Plan: Submit key plan of Project site and building with notation of vantage points marked for location and direction of each photograph. Indicate elevation or story of construction. Include same information as corresponding photographic documentation.

B. Digital Photographs: Submit image files within three days of taking photographs.
   1. Digital Camera: Minimum sensor resolution of 8 megapixels.
   2. Format: Minimum 3200 by 2400 pixels, in unaltered original files, with same aspect ratio as the sensor, uncropped, date and time stamped, in folder named by date of photograph, accompanied by key plan file.
   3. Identification: Provide the following information with each image description in file metadata tag:
      a. Name of Project.
      b. Name and contact information for photographer.
      c. Name of Engineer.
      d. Name of Contractor.
      e. Date photograph was taken.
      f. Description of vantage point, indicating location, direction (by compass point), and elevation or story of construction.
      g. Unique sequential identifier keyed to accompanying key plan.

PART 2 - PRODUCTS

2.1 Photographic Media

A. Digital Images: Provide images in JPG format, produced by a digital camera with minimum sensor size of 8 megapixels, and at an image resolution of not less than 3200 by 2400 pixels.

PART 3 - EXECUTION

3.1 Construction Photographs

A. General: Take photographs using the maximum range of depth of field, and that are in focus, to clearly show the Work. Photographs with blurry or out-of-focus areas will not be accepted.
   1. Maintain key plan with each set of construction photographs that identifies each photographic location.

B. Digital Images: Submit digital images exactly as originally recorded in the digital camera, without alteration, manipulation, editing, or modifications using image-editing software.
   1. Date and Time: Include date and time in file name for each image.
   2. Field Office Images: Maintain one set of images accessible in the field office at Project site, available at all times for reference. Identify images in the same manner as those submitted to Engineer.

C. Preconstruction Photographs: Before starting construction, take photographs of Project site and surrounding properties, including existing items to remain during construction, from different vantage points, as directed by Engineer.
   1. Flag construction limits before taking construction photographs.
   2. Take photographs to show existing conditions adjacent to property before starting the Work.
   3. Take photographs of existing buildings either on or adjoining property to accurately record physical conditions at start of construction.
   4. Take additional photographs as required to record settlement or cracking of adjacent structures, pavements, and improvements.

D. Periodic Construction Photographs: Take photographs coinciding with substantial completion of work and with the cutoff date associated with each Application for Payment. Select vantage points to show status of construction and progress since last photographs were taken.

E. Final Completion Construction Photographs: Take color photographs after date of Substantial Completion for submission as project record documents.

END OF SECTION

SECTION 01 57 13 – TEMPORARY EROSION AND SEDIMENT CONTROL

PART 1 - GENERAL

1.1 Summary

A. This Section includes furnishing, placing, and maintaining temporary sediment control measures as shown on the Drawings, as directed by the Engineer, and where necessary to reduce sediment content of runoff. Control measures are to remain in place until after completion of construction. Measures include the following:
   1. Silt fence.
   2. Catch basin inserts.
   3. Dust control.
      a. Conduct construction operations and activities to minimize the creation and dispersion of dust. If the Engineer determines that water and or calcium chloride is required for more effective dust control, provide such measures at no additional cost.

1.2 Submittals

A. Certificates of Compliance:
   1. Filter fabric and geotextiles for each application.
   2. Catch basin inserts.
   3. Calcium chloride.

1.3 Quality Assurance

A. Standard Specifications: "Form 816, Standard Specifications for Roads, Bridges and Incidental Construction, State of Connecticut, Department of Transportation" and supplements.

B. Connecticut Guidelines for Soil Erosion and Sediment Control by the Connecticut Council on Soil and Water Conservation.

PART 2 - PRODUCTS

2.1 Filter Fabric / Silt Fence

A. Synthetic Filter Fabric: Woven geotextile, 36 inches maximum height, conforming to the following:

Properties	Requirement	Unit
Grab Tensile Strength (ASTM D4632):	124	Lbs
Grab Tensile Elongation (ASTM D4632):	15	Percent
Puncture Strength (ASTM D4833):	65	Lbs
Flow Rate (ASTM D4491):	20	Gal/Min/Sq. Ft.
UV Resistance(at 500 hours) (Retained strength) (ASTM D4355):	80	Percent

B. Product and Manufacturer:
1. ProPex 2130 by Amoco Fabrics and Fibers Company, Austell, GA.
2. Mutual MISF 1855 by Mutual Industries, Inc., Philadelphia, PA.
3. Or equal.

C. Posts
1. Hardwood Stakes: 2-inch by 2-inch by 54-inch minimum.
2. Steel: 0.5 pounds per linear foot by 48 inches long minimum, with projections for fastening.

D. Silt Fence Fasteners: Staples, tie wires or hog rings, as recommended by manufacturer.
a. Staples: Heavy-duty wire, 1-inch long minimum.

2.2 Catch Basin Inserts

A. Regular Flow Silt Sacks: Woven polypropylene that meets the following:

Properties	Test Method	Units
Grab Tensile Strength	ASTM D4632	300 Lbs
Grab Tensile Elongation	ASTM D4632	25 Percent
Puncture Strength	ASTM D4833	120 Lbs
Trapezoid Tear	ASTM D4533	120 Lbs
Flow Rate	ASTM D4491	40 Gal/Min/Sq. Ft.
Permittivity	ASTM D4491	0.55 Sec-1
Mullen Burst	ASTM D3786	800 psi
UV Resistance(at 500 hours) (Retained strength)	ASTM D4355	80 Percent
Apparent Opening Size	ASTM D4751	#40 US Sieve

1. Manufacturer: ACF Environmental, 1801-A Willis Road, Richmond, VA 23237 (800-844-9223),
2. Or equal.

2.3 Dust Control

A. Calcium Chloride: ASTM D98, Type 1 or Type 2.

B. Water: Potable.

PART 3 - EXECUTION

3.1 General

A. Minimize environmental damage during construction. Prevent discharge of fuel, oil, lubricants, and other fluids. Mitigate effects of discharge.

B. Install erosion and sediment control measures prior to clearing, demolition or construction.

C. Construct erosion and sediment control measures in accordance with standards and specifications of the Connecticut Guidelines for Soil Erosion and Sediment Control, Authorities Having Jurisdiction, indicated municipal regulations, and as follows:
   1. Provide additional sedimentation and erosion controls as required by municipality or Authorities Having Jurisdiction to address field conditions.
   2. Do not discharge turbid water from dewatering to inland wetlands or watercourses.
   3. Weekly, and prior to any anticipated rain event, inspect site. Ensure that erosion controls are properly maintained and functioning.
   4. Supply a 24-hour contact name.

D. Install additional control measures, if deemed necessary by the State, Municipality, Authority Having Jurisdiction, or Owner.

E. Implement and maintain the Erosion and Sediment Control Plan. Inform parties engaged on the construction site of the requirements and objectives of the plan. Notify the proper municipal agency of transfer of this responsibility.

F. Protect catch basins with erosion control bales or inserts throughout construction until disturbed areas are stabilized.
   1. Remove and dispose of sediment from control structures.

G. Control dust and wind erosion. Control dust to prevent a hazard to traffic on adjacent roadways. Dust control includes sprinkling of water and uniform application of calcium chloride on exposed soils and haul roads.

H. Do not discharge directly into wetlands or watercourses where dewatering is necessary. Utilize methods and devices as permitted by authorities having jurisdiction and appropriate regulations to minimize and retain suspended solids including pumping water into a temporary sedimentation bowl, providing surge protection at inlet and outlet of pumps, floating pump intake.
   1. If pumping operation results in turbidity problems, stop pumping until means of controlling turbidity are determined and implemented.

I. Where control measures are required for longer than 60 days, use silt fence instead of erosion control bales.

J. Cut Areas
   1. Establish an erosion control line (haybale check or filter fabric) at toe of slope in cut areas and slope stabilization with mulch or grass within 30 days of start of cut operations.

K. Fill Areas
   1. Establish an erosion control line (woodchip berm or filter fabric) approximately 10 feet from toe of slope of proposed fill areas prior to beginning fill installation.
   2. Initiate slope stabilization with mulch or grass within 30 days of start of fill installation.

L. Within 7 days of completing slope construction, stabilize slopes with vegetation or matting to minimize exposure.

M. Stockpiles
   1. Side Slopes: 2:1 maximum.
   2. Surround stockpiles by a sediment barrier.
   3. Stabilize stockpiles left bare for more than 15 days with temporary vegetation or mulch.

N. Final Grading
   1. If final grading is delayed for more than 30 days after land disturbances cease, stabilize soils with temporary vegetation or mulch.

O. Planting Season for Temporary Vegetation
   1. March 1 to June 15 and August 1 to October 1.
   2. After September 15, stabilize areas with haybale check, filter fabric, or woodchip mulch.

P. Areas to Be Left Bare Prior to Finished Grading and Seeding
   1. Within Planting Seasons
      a. Temporarily seed with Perennial Ryegrass
      b. Apply at a rate of 2 pounds per 1000 sq. ft. at a depth of 1/2 inch.
      c. Where grass predominates, fertilize according to a soil test at a minimum application rate of one pound per acre.
   2. Outside of Planting Seasons
      a. Apply air-dried wood chip mulch, free of coarse matter.
      b. Apply at a rate of 185 to 275 pounds per 1000 sq. ft.

3.2 Control Systems

A. Silt Fence
   1. Install fencing at location as shown on the Drawings or where directed by the Engineer. Maintain pitch of 2 to 20 degrees, with inclination toward potential silt source.
   2. Install bottom 6 inches of fabric by trenching and burying the fabric into the notched ground.
   3. Drive posts into ground a minimum of 12 inches.
   4. Locate fabric splices at posts only. Provide 6-inch overlap and seal.

B. Sediment Control Bales

1. Install at locations as shown on the Drawings or where directed by the Engineer. Place bales lengthwise with ends tight abutting one another. Install bales with bindings located on the sides.
2. Entrench bales 4 inches and backfill. Place backfill toward potential silt source.
3. Secure in place with 2 stakes per bale and insert straw in voids between bales.

C. Catch Basin Inserts
1. Remove catch basin grate, insert silt sack, and secure in place by replacing grate.

3.3 Dust Control

A. Apply water and calcium chloride uniformly over the surface when dust becomes a nuisance or when directed by the Engineer.
1. Provide shut-off valve in convenient location on water truck, to allow for regulating water flow.

3.4 Field Quality Control

A. Silt Fence and Erosion Control Bale Maintenance
1. Inspect control system immediately after each rainfall and daily during prolonged rainfall. Make repairs immediately.
2. Remove and dispose of accumulated sediments when sediment reaches approximately one-third the height of the control system, or when directed by the Engineer.
3. Replace control system promptly if fabric decomposes or system becomes ineffective prior to the expected usable life.
4. Maintain or replace system until no longer necessary for the intended purpose.

B. Catch Basin Insert Maintenance
1. Inspect after each major precipitation event. Inspect every two weeks if no major rain events have occurred.
2. Remove, clean, and reinstall silt sack when sediment accumulates to half capacity of sack.

3.5 Removal

A. Remove and dispose of control systems after area stabilizes with new growth, or when directed by the Engineer.

END OF SECTION

SECTION 02 41 19 - SELECTIVE DEMOLITION

PART 1 - GENERAL

1.1 Related Documents

A. Drawings and general provisions of the Contract, including General and Supplementary Conditions and Division 01 Specification Sections, apply to this Section.

1.2 Summary

A. Section Includes:
   1. Demolition and removal of selected site elements.
   2. Salvage of existing items to be reused or recycled.

1.3 Definitions

A. Remove: Detach items from existing construction and legally dispose of them off-site unless indicated to be removed and salvaged or removed and reinstalled.

B. Remove and Salvage: Carefully detach from existing construction, in a manner to prevent damage, and deliver to Owner.

C. Remove and Reinstall: Detach items from existing construction, prepare for reuse, and reinstall where indicated.

D. Existing to Remain: Existing items of construction that are not to be permanently removed and that are not otherwise indicated to be removed, removed and salvaged, or removed and reinstalled.

1.4 Materials Ownership

A. Unless otherwise indicated, demolition waste becomes property of Contractor.

1.5 Pre-installation Meetings

A. Pre-demolition Conference: Conduct conference at Project site.
   1. Inspect and discuss condition of construction to be selectively demolished.
   2. Review structural load limitations of existing structure.
   3. Review and finalize selective demolition schedule and verify availability of materials, demolition personnel, equipment, and facilities needed to make progress and avoid delays.
   4. Review requirements of work performed by other trades that rely on substrates exposed by selective demolition operations.
   5. Review areas where existing construction is to remain and requires protection.

1.6 Informational Submittals

A. Proposed Protection Measures: Submit report, including drawings, that indicates the measures proposed for protecting individuals and property, for environmental protection, for dust control and, for noise control. Indicate proposed locations and construction of barriers.

B. Schedule of Selective Demolition Activities: Indicate the following:
   1. Detailed sequence of selective demolition and removal work, with starting and ending dates for each activity. Ensure Owner's building managers and other tenants' on-site operations are uninterrupted.
   2. Interruption of utility services. Indicate how long utility services will be interrupted.
   3. Coordination for shutoff, capping, and continuation of utility services.
   4. Coordination of Owner's continuing occupancy of portions of existing building and of Owner's partial occupancy of completed Work.

C. Inventory: Submit a list of items to be removed and salvaged and deliver to Owner prior to start of demolition.

D. Pre-demolition Photographs or Video: Submit before Work begins.

E. Warranties: Documentation indicated that existing warranties are still in effect after completion of selective demolition.

1.7 Closeout Submittals

A. Inventory: Submit a list of items that have been removed and salvaged.

B. Landfill Records: Indicate receipt and acceptance of hazardous wastes by a landfill facility licensed to accept hazardous wastes.

1.8 Field Conditions

A. Owner will occupy portions of building immediately adjacent to selective demolition area. Conduct selective demolition so Owner's operations will not be disrupted.

B. Notify Engineer of discrepancies between existing conditions and Drawings before proceeding with selective demolition.

C. Hazardous Materials: It is not expected that hazardous materials will be encountered in the Work.
   1. If suspected hazardous materials are encountered, do not disturb; immediately notify Engineer and Owner.

D. Storage or sale of removed items or materials on-site is not permitted.

E. Utility Service: Maintain existing utilities indicated to remain in service and protect them against damage during selective demolition operations.
   1. Maintain fire-protection facilities in service during selective demolition operations.

1.9 Warranty

A. Existing Warranties: Remove, replace, patch, and repair materials and surfaces cut or damaged during selective demolition, by methods and with materials so as not to void existing warranties. Notify warrantor before proceeding.

B. Notify warrantor on completion of selective demolition, and obtain documentation verifying that existing system has been inspected and warranty remains in effect. Submit documentation at Project closeout.

PART 2 - PRODUCTS

2.1 Performance Requirements

A. Regulatory Requirements: Comply with governing EPA notification regulations before beginning selective demolition. Comply with hauling and disposal regulations of authorities having jurisdiction.

B. Standards: Comply with ANSI/ASSE A10.6 and NFPA 241.

PART 3 - EXECUTION

3.1 Examination

A. Verify that utilities have been disconnected and capped before starting selective demolition operations.

B. Review record documents of existing construction provided by Owner. Owner does not guarantee that existing conditions are same as those indicated in record documents.

C. Survey existing conditions and correlate with requirements indicated to determine extent of selective demolition required.

D. When unanticipated mechanical, electrical, or structural elements that conflict with intended function or design are encountered, investigate and measure the nature and extent of conflict. Promptly submit a written report to Engineer.

E. Survey of Existing Conditions: Record existing conditions by use of pre-construction photographs and preconstruction videotapes.
   1. Comply with requirements specified in Section 013233 "Photographic Documentation."
   2. Inventory and record the condition of items to be removed and salvaged. Provide photographs or video of conditions that might be misconstrued as damage caused by salvage operations.

3.2 Utility Services And Mechanical/Electrical Systems

A. Existing Services/Systems to Remain: Maintain services/systems indicated to remain and protect them against damage.

1. Comply with requirements for existing services/systems interruptions specified in Section 011000 "Summary."

B. Existing Services/Systems to Be Removed, Relocated, or Abandoned: Locate, identify, disconnect, and seal or cap off indicated utility services and mechanical/electrical systems serving areas to be selectively demolished.
1. Arrange to shut off indicated utilities with utility companies.
2. If services/systems are required to be removed, relocated, or abandoned, provide temporary services/systems that bypass area of selective demolition and that maintain continuity of services/systems to other parts of building.
3. Disconnect, demolish, and remove fire alarm and electrical system, equipment, and components indicated to be removed.
   a. Equipment to Be Removed: Disconnect and cap services and remove equipment.

3.3 Preparation

A. Site Access and Temporary Controls: Conduct selective demolition and debris-removal operations to ensure minimum interference with roads, streets, walks, walkways, and other adjacent occupied and used facilities.
1. Comply with requirements for access and protection specified in Section 015000 "Temporary Facilities and Controls."

B. Temporary Facilities: Provide temporary barricades and other protection required to prevent injury to people and damage to adjacent buildings and facilities to remain.
1. Provide protection to ensure safe passage of people around selective demolition area and to and from occupied portions of building.
2. Provide temporary weather protection, during interval between selective demolition of existing construction on exterior surfaces and new construction, to prevent water leakage and damage to structure and interior areas.
3. Protect walls, ceilings, floors, and other existing finish work that are to remain or that are exposed during selective demolition operations.
4. Cover and protect furniture, furnishings, and equipment that have not been removed.
5. Comply with requirements for temporary enclosures, dust control, heating, and cooling specified in Section 015000 "Temporary Facilities and Controls."

C. Temporary Shoring: Provide and maintain shoring, bracing, and structural supports as required to preserve stability and prevent movement, settlement, or collapse of construction and finishes to remain, and to prevent unexpected or uncontrolled movement or collapse of construction being demolished.

1. Strengthen or add new supports when required during progress of selective demolition.

3.4 Selective Demolition, General

A. General: Demolish and remove existing construction only to the extent required by new construction and as indicated. Use methods required to complete the Work within limitations of governing regulations and as follows:
   1. Neatly cut openings and holes plumb, square, and true to dimensions required. Use cutting methods least likely to damage construction to remain or adjoining construction. Use hand tools or small power tools designed for sawing or grinding, not hammering and chopping, to minimize disturbance of adjacent surfaces. Temporarily cover openings to remain.
   2. Cut or drill from the exposed or finished side into concealed surfaces to avoid marring existing finished surfaces.
   3. Do not use cutting torches until work area is cleared of flammable materials. At concealed spaces, such as duct and pipe interiors, verify condition and contents of hidden space before starting flame-cutting operations. Maintain fire watch and portable fire-suppression devices during flame-cutting operations.
   4. Maintain adequate ventilation when using cutting torches.
   5. Remove decayed, vermin-infested, or otherwise dangerous or unsuitable materials and promptly dispose of off-site.
   6. Locate selective demolition equipment and remove debris and materials so as not to impose excessive loads on supporting walls, floors, or framing.
   7. Dispose of demolished items and materials promptly.

B. Existing Items to Remain: Protect construction indicated to remain against damage and soiling during selective demolition. When permitted by Engineer, items may be removed to a suitable, protected storage location during selective demolition and cleaned and reinstalled in their original locations after selective demolition operations are complete.

3.5 Disposal Of Demolished Materials

A. General: Except for items or materials indicated to be recycled, reused, salvaged, reinstalled, or otherwise indicated to remain Owner's property, remove demolished materials from Project site and legally dispose of them in an EPA-approved landfill.
   1. Do not allow demolished materials to accumulate on-site.
   2. Remove and transport debris in a manner that will prevent spillage on adjacent surfaces and areas.
   3. Remove debris from elevated portions of building by chute, hoist, or other device that will convey debris to grade level in a controlled descent

B. Burning: Do not burn demolished materials.

C. Disposal: Transport demolished materials off Owner's property and legally dispose of them.

3.6 Cleaning

A. Clean adjacent structures and improvements of dust, dirt, and debris caused by selective demolition operations. Return adjacent areas to condition existing before selective demolition operations began.

END OF SECTION

SECTION 26 05 05 – COMMON ELECTRICAL REQUIREMENTS

PART 1 - GENERAL

1.1 Related Documents

A. Drawings and general provisions of the Contract, including General and Supplementary Conditions and Division 01 Specification Sections, apply to this Section.

1.2 Summary

A. Provide basic electrical system components including raceway, wire and cable, pull and junction boxes, outlet boxes, wiring devices, motor starters, disconnect switches, overcurrent protective devices, electrical equipment not furnished as an integral part of manufactured equipment, and all incidental devices and accessories necessary for a complete and operational system as indicated on the Drawings and as specified.

B. Coordination of Electric and Telecommunication Providers
   1. Coordinate all utility company activities.
      a. Provide utility companies a written schedule of electrical demolition activities and new work to ensure proper sequencing of each utility company's work.
         1) Keep the utility companies apprised of any schedule changes.

C. Costs and Fees Associated with Electric and Telecommunication Providers
   1. Work performed by each utility company will be paid for by the Contractor as an allowance.
   2. Permit fees will be paid for by the Contractor.

1.3 Permits And Fees

A. Provide all necessary notices, obtain all permits, file all required plans, obtain all necessary approvals of governmental departments and utilities having jurisdiction over the electrical work and obtain all required certificates and inspections.

1.4 Codes, Regulations And Standards

A. All materials, equipment, apparatus and work shall be in accordance with the latest edition of the National Electrical Code, State and Local codes, and requirements of local utility companies.

B. Electrical equipment and materials shall be approved by the Underwriters' Laboratories, Inc. or other national, well known testing laboratory as evidenced by listing or labeling.
   1. All equipment items or parts thereof shall bear the manufacturer's nameplate, which shall give all pertinent information for the particular item.
      a. Distributor's or contractor's nameplates will not be acceptable.

C. Discrepancies. Provide the more stringent requirement in case of discrepancies among the Contract Documents, Code requirements and industry standards. Also, include item or arrangement of better quality, greater quantity or higher cost in Contract price.
   1. Notify Engineer in writing of identified discrepancies.

D. Design Drawings: Drawings are diagrammatic in nature. Locations of electrical equipment and accessories are not intended to show every offset and fitting, nor every structural difficulty that may be encountered during the installation of the Work.
   1. Where necessary and after approval from the Engineer, revise alignment of work and equipment from that shown on Drawings without additional cost to the Owner.
      a. Identify revised locations on Record Drawings.

1.5 Definitions

A. The following terms are used in this Division and are defined as follows:
   "Pr[illegible]d[illegible]" [illegible]T[illegible]r[illegible]d[illegible], r[illegible]d[illegible]r[illegible]d r[illegible]r[illegible]r[illegible], [illegible]r[illegible]r[illegible]r[illegible]d[illegible]r d[illegible]
   2. "Furnish": To purchase, acquire and deliver to the site, complete with related accessories.
   3. "Install": To erect, mount and connect completely, by acceptable methods.
   4. "Concealed": Embedded in masonry or other construction; or installed in furred spaces, trenches or crawl spaces; or installed within double partitions or hung ceilings; or in enclosures.
   5. "Exposed": Visible to building occupants, excluding mechanical room and utility tunnel locations.
   6. "Equal": Of weight, size, design, capacity and efficiency to meet requirements specified and shown, and of acceptable manufacture, as determined in the opinion of the Engineer.
   7. "Acceptable": Acceptable, as determined in the opinion of the Engineer.
   8. "Named" Product: Manufacturer's name for product, as recorded in published documents of latest issue as of date of Contract Documents. Obtain Engineer's permission before using products of later or earlier model.

1.6 Submittals - General

A. Identify the following:
   1. Accessories and special/non-standard features and materials to be provided.
   2. List of accessories which are required for a proper installation but are NOT part of the submittal.
      a. In the latter case, identify the Section(s) under which the accessories are being provided.

B. Format: Include the following information on each submittal. Failure to comply will result in submittal rejection.
   1. Specification Section and Paragraph under which equipment is specified.)
   2. Equipment or fixture identification corresponding to that used in Contract Documents.
   3. Descriptive data necessary to verify compliance with Contract Documents.

C. Operation and Maintenance Manuals Format
   1. Arrange manuals in the following format:
      a. Tab A - Description of Electrical System and Component Parts, including function, normal operating characteristics and limiting conditions, performance curves, engineering data and tests, and complete nomenclature and manufacturer's number for replaceable parts.
      b. Tab B - Operating Procedures, including start-up, break-in, routine and normal operating instructions; regulation, control, stopping, shutdown and emergency instructions; summer and winter operating instructions; and any special operating instructions.
      c. Tab C - Sequence of Operation and Control Diagrams, corrected to show as-built conditions.
      d. Tab D - Copies of approved shop drawings, charts and diagrams.
      e. Tab E - Maintenance Procedures, including routine operations, guide to trouble-shooting; disassembly, repair and reassembly; alignment, adjusting and checking; servicing and lubrication schedule, and list of lubricants; manufacturer's installation and maintenance bulletins and related information.
      f. Tab F - Parts List, including illustrations, assembly drawings and diagrams required for maintenance, predicted life of parts subject to wear, and recommendations for stocking spare parts.
      g. Tab G - Names, addresses and telephone numbers of manufacturer's representative and Service Company.
      h. Tab H - Other data, if required under pertinent Sections of these Specifications.

D. Review Process: Upon completion of submittal review, Action Submittals will be returned, marked with one of following notations: Furnish as Submitted, Furnish as Corrected, Revise and Resubmit, Rejected, or Submit Specified Item.
   1. Provide only materials and products noted as "Furnish as Submitted" or "Furnish as Corrected".

1.7 INFORMATIONAL SUBMITTALS

A. List of Proposed Manufacturers: Submit prior to product and shop drawing submittals.

B. Copies of notification letters, permits, certificates, and inspection reports.

C. Manufacturers Guarantee: Furnish standard manufacturers' guarantees for work. Such guarantees shall be in addition to, and not in lieu of, other liabilities under the law or by other provisions of the Contract Documents.

1.8 Action Submittals

A. Product Data:
   1. Manufacturer's specifications including materials of construction, metal gage, thickness and finish.

2. Performance data, ratings, operating characteristics and operating limits.
3. Electrical ratings and characteristics.
4. Certifications requested, including UL label or listing.

B. Certification: Certify that system elements are of sufficient capacity to meet the specified performance requirements as set forth in Contract Documents.

C. Shop Drawings
1. Certified dimensional drawings including clearances required for maintenance or access.
2. Wiring and control diagrams, where applicable.

D. The selection and intention to use a product specified by name shall NOT excuse the need for timely submission of shop drawings for that product.

E. Submission of shop drawings of unnamed manufacture or shop drawings at variance with the Contract Documents is NOT a proper request for substitution.

F. Samples
1. Submit samples as requested by Engineer/Owner.
2. Clearly identify samples that are submitted in lieu of shop drawings. Submit a minimum of two samples.
   a. Only one sample will be returned. Keep the accepted sample at the job site office.

1.9 Closeout Submittals

A. Record Drawings
1. Maintain and keep on site at all times, one complete set of blackline prints for Electrical and Communication work. Promptly and accurately record changes, revisions and additions in a clear and neat format.
2. Indicate daily progress on Record Drawings by coloring in the various lines, fixtures, apparatus and associated appurtenances as they are erected.
3. Approval of requisition for payment of work installed will NOT be given unless supported by the Record Drawings.
4. At the conclusion of work, deliver Record Drawings to Owner.

B. Operation and Maintenance Manuals
1. Submit Operation and Maintenance manuals for each system or piece of equipment, at least 4 weeks prior to request for acceptance of same. Upon acceptance, furnish four copies of each manual to Engineer for transmittal to Owner.

C. Video of Equipment Instruction Procedures. Pertaining to the operation or programming of equipment. Submit to Owner.

D. Letter of Guarantee.

E. Extended equipment warranty.

1.10 Quality Assurance

A. Only the best of workmanship in accordance with present standards and generally accepted construction practices will be acceptable. Any work which the workmanship is judged by the Engineer to be below the present standards or generally accepted construction practices shall be replaced with properly done work at the Contractor's expense.

1.11 Warranty

A. Warranty materials, equipment and labor against defects for a period of one year from date of Substantial Completion. Repair or replace areas, materials and other systems damaged as a result of defects.
   1. Replace defective items (requiring excessive servicing) during warranty period at no additional cost to the Owner.
   2. Provide maintenance and emergency service including labor and materials during the warranty period at no additional cost to Owner. Perform service and replace affected components within reasonable time period.

PART 2 - PRODUCTS

2.1 General

A. Materials for the Work are specified in the appropriate Specification Sections and may also be specified on the Drawings.

2.2 Product Selection

A. Contractor's options for selecting products are limited by Contract Document requirements and governing regulations and are NOT controlled by industry traditions or procedures experienced by Contractor on previous construction projects. Required procedures include, but are NOT necessarily limited to, following various methods of specifying:
   1. "Or Equal": Where named products are accompanied by the term "or equal" or words of similar effect, provide one of named products or propose substitute product according to "SUBSTITUTIONS" Article.
   2. Standards, Codes and Regulations: Where specification requires only compliance with a standard, code or regulation, Contractor may select any product which complies with requirements of that standard, code or regulation.
   3. Performance Requirements: Provide products which comply with specific performances indicated and which are recommended by manufacturer (in published product literature or by individual certification) for application intended. Overall performance of product is implied where product is specified with only certain specific performance requirements.

B. Inclusion by name, of more than one manufacturer or fabricator, does NOT necessarily imply acceptability of standard products of those named. All manufacturers, named or proposed, shall

conform, with modification as necessary, to criteria established by Contract Documents for performance, efficiency, materials and special accessories.

2.3 Substitutions

A. Substitution requests from vendors, suppliers and manufacturers may be submitted only during bid period. Requests for substitution will NOT be considered unless requests are received by the Engineer at least 7 days prior to Bid Due date AND all supporting data is provided such that an adequate review can be performed. If substitution is acceptable, an Addendum will be issued.

B. Substitution request from Contractors may be submitted only after the award of Contract. Requests shall be in writing on Contractor's letterhead and shall include:
   1. Contractor's statement to the effect that proposed substitution will result in overall work equal to or better than, work originally intended.
   2. Contractor's detailed comparison of significant qualities between specified item and proposed substitution.
   3. Statement of effect on construction time, coordination with other affected work, and cost information or proposal.

C. Substitution requests from contractors will only be considered if:
   1. Extensive revisions to Contract Documents are NOT required;
   2. Changes are in keeping with general intent of Contract Documents;
   3. Requests are submitted in a timely and proper manner, fully documented; and
   4. One or more of following conditions is satisfied; all as judged by Engineer:
      a. Where request is directly related to the "or equal" clause or words of similar effect in Contract Documents.
      b. Where specified product, material or method can NOT be provided within Contract Time; but NOT as a result of Contractor's failure to pursue the work promptly to coordinate various activities properly.
      c. Where specified product, material or method can NOT be provided in manner which is compatible with other materials of the work and where Contractor certifies that proposed substitution is compatible.
      d. Where specified product, material or method can NOT be properly coordinated with other materials of the work and where Contractor certifies that proposed substitution can be properly coordinated.
      e. Where specified product, material or method can NOT be warranted as required and where Contractor certifies that proposed substitution can be so warranted.
      f. Where specified product, material or method can NOT be used without adversely affecting Owner's insurance coverage on completed work and where Contractor certifies that proposed substitution can be so used.
      g. Where specified product, material or method will encounter other substantial non-compliances which are NOT possible to otherwise overcome except by using proposed substitution.
      h. Where specified product, material or method can NOT receive required approval by governing authority and proposed substitution can be so approved.

i. Where a substantial advantage is offered to the Owner; in terms of cost, time, energy conservation or other valuable considerations; after deducting offsetting responsibilities that this Contractor may be required to bear, including additional compensation to Engineer for any redesign or evaluation services, increased cost of other work by other contractors, and similar considerations.

D. The burden is upon the Contractor, supplier and manufacturer to satisfy to the Engineer that:
1. The proposed substitute is equal to, or superior to, the item specified.
2. The intent of the Contract Documents, including required performance, capacity, efficiency, quality, durability, safety, function, appearance, space clearances and delivery date, will be equaled or bettered.

E. Changes in work of other trades, such as structural supports, which are required as a result of substitution and the associated costs for such changes, shall be the complete responsibility of the Contractor proposing the substitution. There shall be NO additional expense to the Owner.

PART 3 - EXECUTION

3.1 Installation

A. Install work as close as possible to layouts shown on Contract Drawings. Modify work as necessary to:
1. Provide maximum possible headroom and space clearances.
2. Provide ready access to all parts of the work, for inspection, operation, safe maintenance and repair, and code conformance.
3. Coordinate and arrange work to avoid conflicts with work of other trades. Satisfactory space conditions shall be shown on coordination drawing submittals.

B. Where space appears inadequate, consult Engineer before proceeding with installation.

C. Finished work shall present a neat coordinated appearance.

3.2 Inspection Of work

A. Do not cover or enclose work until it has been inspected, tested, and approved by the Owner's Representative and by authorities having jurisdiction.

B. When requested, uncover and expose work that has not been completely inspected, tested and approved. Repair and restore surfaces and enclosures at no additional cost to Owner.

3.3 Field Quality Control

A. Instruct the Owner or the Owner's Representative in the operation, adjustment, and maintenance of electrical equipment. The procedures of any instructions pertaining to the operation and/or programming of equipment shall be video taped and two copies turned over to the Owner.

B. Obtain services of manufacturer's representatives of major equipment during erection or construction of their respective equipment to insure proper installation of same. Failure to have such checks made by manufacturers shall place full responsibility for proper installation on contractor who shall make any corrections or remedy all defects at no additional cost to Owner. If required by the Engineer, a letter shall be provided from each manufacturer certifying that manufacturer's requirements are met.

C. Test and adjust each system and equipment for which he is responsible during the progress of the work, as required by the Engineer, and shall thoroughly test the same under working conditions at the completion of the work.

D. Coordinate activities related to the electrical work.

3.4 Cleaning

A. Remove debris at the close of each workday from work areas and adjacent occupied areas. Maintain adjacent areas in a safe and useable condition.

END OF SECTION

SECTION 26 05 19 - LOW-VOLTAGE ELECTRICAL POWER CONDUCTORS AND CABLES

PART 1 - GENERAL

1.1 Related Documents

A. Drawings and general provisions of the Contract, including General and Supplementary Conditions and Division 01 Specification Sections, apply to this Section.

1.2 Summary

A. This Section includes the following:
   1. Building wires and cables rated 600 V and less.
   2. Connectors, splices, and terminations rated 600 V and less.

B. Related Sections include the following:
   1. Division 33 Section "Overhead Electrical Distribution" for single-conductor and multi-conductor cables, cable splices, and terminations for electrical distribution systems with 2001 to 35,000 V.

1.3 Definitions

A. EPDM: Ethylene-propylene-diene terpolymer rubber.

B. NBR: Acrylonitrile-butadiene rubber.

1.4 Submittals

A. Product Data: For each type of product indicated.

B. Qualification Data: For testing agency.

C. Field quality-control test reports.

1.5 Quality Assurance

A. Testing Agency Qualifications: An independent agency, with the experience and capability to conduct the testing indicated, that is a member company of the InterNational Electrical Testing Association or is a nationally recognized testing laboratory (NRTL) as defined by OSHA in 29 CFR 1910.7, and that is acceptable to authorities having jurisdiction.
   1. Testing Agency's Field Supervisor: Person currently certified by the InterNational Electrical Testing Association or the National Institute for Certification in Engineering Technologies to supervise on-site testing specified in Part 3.

B. Electrical Components, Devices, and Accessories: Listed and labeled as defined in NFPA 70, Article 100, by a testing agency acceptable to authorities having jurisdiction, and marked for intended use.

C. Comply with NFPA 70.

1.6 Coordination

A. Set sleeves in cast-in-place concrete, masonry walls, and other structural components as they are constructed.

PART 2 - PRODUCTS

2.1 Conductors And Cables

A. Available Manufacturers: Subject to compliance with requirements, manufacturers offering products that may be incorporated into the Work include, but are not limited to, the following:
1. American Insulated Wire Corp.; a Leviton Company.
2. General Cable Corporation.
3. Senator Wire & Cable Company.
4. Southwire Company.
5. Approved Manufacturer

B. Copper Conductors: Comply with NEMA WC 70. Minimum size for power and lighting shall be No. 12. Minimum size for low voltage control shall be No. 16.

C. Conductor Insulation: Comply with NEMA WC 70 for Types THHN-THWN and XHHW.

2.2 Connectors And Splices

A. Available Manufacturers: Subject to compliance with requirements, manufacturers offering products that may be incorporated into the Work include, but are not limited to, the following:
1. AFC Cable Systems, Inc.
2. Hubbell Power Systems, Inc.
3. O-Z/Gedney; EGS Electrical Group LLC.
4. 3M; Electrical Products Division.
5. Tyco Electronics Corp.
6. Approved Manufacturer

B. Description: Factory-fabricated connectors and splices of size, ampacity rating, material, type, and class for application and service indicated.

PART 3 - EXECUTION

3.1 Conductor Material Applications

A. Feeders: Copper. Solid for No. 10 AWG and smaller; stranded for No. 8 AWG and larger.

B. Branch Circuits: Copper. Solid for No. 10 AWG and smaller; stranded for No. 8 AWG and larger.

3.2 Installation Of Conductors And Cables

A. Use manufacturer-approved pulling compound or lubricant where necessary; compound used must not deteriorate conductor or insulation. Do not exceed manufacturer's recommended maximum pulling tensions and sidewall pressure values.

B. Use pulling means, including fish tape, cable, rope, and basket-weave wire/cable grips, that will not damage cables or raceway.

C. There shall be no splices in any conductors except where circuits are branched and located in accessible junction or outlet box.

D. Unless otherwise noted, each conduit raceway shall contain only those conductors constituting a single feeder circuit.

E. Branch circuit home runs shall not share a common neutral. Neutral conductors shall be of same size as phase conductors unless specifically noted otherwise.

F. All feeder and branch circuits shall have a full size separate grounding conductor installed in the conduit.

G. Identify and color-code conductors and cables according to Division 26 Section "Identification for Electrical Systems."

3.3 Connections

A. Tighten electrical connectors and terminals according to manufacturer's published torque-tightening values. If manufacturer's torque values are not indicated, use those specified in UL 486A and UL 486B.

B. Make splices and taps that are compatible with conductor material and that possess equivalent or better mechanical strength and insulation ratings than unspliced conductors.

C. All connections and pigtail splices for wires #14-#10 shall be made with insulated type "Y", "R", or "B" spring connectors or compression splices. Conductor sizes #8 and larger shall be made with compression connectors.

D. Use split bolt connectors for copper conductor splices and taps, 6 AWG and larger. Tape uninsulated conductors and connector with electrical tape to 150 percent of insulation rating of conductor.

E. Make splices, taps, and terminations to carry full ampacity of conductors with no perceptible temperature rise.

F. Wiring at Outlets: Install conductor at each outlet, with at least 12 inches (300 mm) of slack.

3.4 Field Quality Control

A. Testing Agency: Engage a qualified testing agency to perform tests and inspections and prepare test reports.

B. Perform tests and inspections and prepare test reports.

C. Tests and Inspections:
   1. After installing conductors and cables and before electrical circuitry has been energized, test for compliance with requirements.
   2. Perform each visual and mechanical inspection and electrical test stated in NETA Acceptance Testing Specification. Certify compliance with test parameters.
   3. Infrared Scanning: After Substantial Completion, but not more than 60 days after Final Acceptance, perform an infrared scan of each splice in cables and conductors No. 3 AWG and larger. Remove box and equipment covers so splices are accessible to portable scanner.
      a. Follow-up Infrared Scanning: Perform an additional follow-up infrared scan of each splice 11 months after date of Substantial Completion.
      b. Instrument: Use an infrared scanning device designed to measure temperature or to detect significant deviations from normal values. Provide calibration record for device.
      c. Record of Infrared Scanning: Prepare a certified report that identifies splices checked and that describes scanning results. Include notation of deficiencies detected, remedial action taken, and observations after remedial action.

D. Test Reports: Prepare a written report to record the following:
   1. Test procedures used.
   2. Test results that comply with requirements.
   3. Test results that do not comply with requirements and corrective action taken to achieve compliance with requirements.

E. Remove and replace malfunctioning units and retest as specified above.

END OF SECTION

SECTION 26 05 26 - GROUNDING AND BONDING

PART 1 - GENERAL

1.1 Related Documents

A. Drawings and general provisions of the Contract, including General and Supplementary Conditions and Division 1 Specification Sections, apply to this Section.

1.2 Summary

A. This Section includes methods and materials for grounding systems and equipment, plus the following special applications:

1. Overhead-lines grounding.
2. Underground distribution grounding.

1.3 Submittals

A. Product Data: For each type of product indicated.

B. Qualification Data: For testing agency and testing agency's field supervisor.

C. Field quality-control test reports.

1.4 Quality Assurance

A. Testing Agency Qualifications: An independent agency, with the experience and capability to conduct the testing indicated, that is a member company of the InterNational Electrical Testing Association or is a nationally recognized testing laboratory (NRTL) as defined by OSHA in 29 CFR 1910.7, and that is acceptable to authorities having jurisdiction.

1. Testing Agency's Field Supervisor: Person currently certified by the InterNational Electrical Testing Association to supervise on-site testing specified in Part 3.

B. Electrical Components, Devices, and Accessories: Listed and labeled as defined in NFPA 70, Article 100, by a testing agency acceptable to authorities having jurisdiction, and marked for intended use.

C. Comply with UL 467 for grounding and bonding materials and equipment.

PART 2 - PRODUCTS

2.1 Conductors

A. Insulated Conductors: Copper wire or cable insulated for 600 V unless otherwise required by applicable Code or authorities having jurisdiction.

B. Bare Grounding Conductor and Conductor Protector for Wood Poles:

1. No. 4 AWG minimum, soft-drawn copper.

2. Conductor Protector: Half-round PVC or wood molding. If wood, use pressure-treated fir or cypress or cedar.

C. Grounding Bus: Rectangular bars of annealed copper, 1/4 by 2 inches in cross section, unless otherwise indicated; with insulators.

2.2 Connectors

A. Listed and labeled by a nationally recognized testing laboratory acceptable to authorities having jurisdiction for applications in which used, and for specific types, sizes, and combinations of conductors and other items connected.

B. Bolted Connectors for Conductors and Pipes: Copper or copper alloy, bolted pressure-type, with at least two bolts.

1. Pipe Connectors: Clamp type, sized for pipe.

C. Welded Connectors: Exothermic-welding kits of types recommended by kit manufacturer for materials being joined and installation conditions.

2.3 GROUNDING ELECTRODES

A. Ground Rods: Copper-Clad, 3/4 Inch In Diameter By10 Feet.

PART 3 - EXECUTION

3.1 Applications

A. Conductors: Install solid conductor for No. 8 AWG and smaller and stranded conductors for No. 6 AWG and larger, unless otherwise indicated.

B. Conductor Terminations and Connections:

1. Pipe and Equipment Grounding Conductor Terminations: Bolted connectors.

2. Underground Connections: Welded connectors, except at test wells and as otherwise indicated.

3. Connections to Ground Rods: Bolted connectors.

4. Connections to Structural Steel: Welded connectors.

3.2 Grounding Overhead Lines

A. Comply with IEEE C2 grounding requirements.

B. Install 2 parallel ground rods if resistance to ground by a single, ground-rod electrode exceeds 25 ohms.

C. Drive ground rods until tops are 12 inches below finished grade in undisturbed earth.

D. Ground-Rod Connections: Install bolted connectors for underground connections and connections to rods.

E. Protect grounding conductors running on surface of wood poles with molding extended from grade level up to and through communication service and transformer spaces.

3.3 Grounding Underground Distribution System Components

A. Comply with IEEE C2 grounding requirements.

3.4 Equipment Grounding

A. Install insulated equipment grounding conductors with all feeders and branch circuits.

B. Install insulated equipment grounding conductors with the following items, in addition to those required by NFPA 70:

1. Feeders and branch circuits.

2. Three-phase motor and appliance branch circuits.

3. Flexible raceway runs.

3.5 Installation

A. Grounding Conductors: Route along shortest and straightest paths possible, unless otherwise indicated or required by Code. Avoid obstructing access or placing conductors where they may be subjected to strain, impact, or damage.

B. Ground Rods: Drive rods until tops are 2 inches below finished floor or final grade, unless otherwise indicated.

3.6 Field Quality Control

A. Perform the following tests and inspections and prepare test reports:

1. After installing grounding system but before permanent electrical circuits have been energized, test for compliance with requirements.
2. Test completed grounding system at each location where a maximum ground-resistance level is specified, at service disconnect enclosure grounding terminal, and at individual ground rods. Make tests at ground rods before any conductors are connected.
    a. Measure ground resistance not less than two full days after last trace of precipitation and without soil being moistened by any means other than natural drainage or seepage and without chemical treatment or other artificial means of reducing natural ground resistance.
    b. Perform tests by fall-of-potential method according to IEEE 81.
3. Prepare dimensioned drawings locating each ground rod and ground rod assembly, and other grounding electrodes. Identify each by letter in alphabetical order, and key to the record of tests and observations. Include the number of rods driven and their depth at each location, and include observations of weather and other phenomena that may affect test results. Describe measures taken to improve test results.

B. Report measured ground resistances that exceed the following values:
1. Power and Lighting Equipment or System with Capacity 500 kVA and Less: 10 ohms.
2. Power and Lighting Equipment or System with Capacity 500 to 1000 kVA: 5 ohms.
3. Power and Lighting Equipment or System with Capacity More Than 1000 kVA: 3 ohms.
4. Manhole Grounds: 10 ohms.

C. Excessive Ground Resistance: If resistance to ground exceeds specified values, notify Engineer promptly and include recommendations to reduce ground resistance.

END OF SECTION

SECTION 26 05 33 - RACEWAY AND BOXES FOR ELECTRICAL SYSTEMS

PART 1 - GENERAL

1.1 Related Documents

A. Drawings and general provisions of the Contract, including General and Supplementary Conditions and Division 01 Specification Sections, apply to this Section.

1.2 Summary

A. This Section includes raceways, fittings, boxes, enclosures, and cabinets for electrical wiring.

B. Related Sections include the following:
   1. Division 26 Section "Underground Ducts and Raceways for Electrical Systems" for exterior ductbanks, manholes, and underground utility construction.

1.3 Definitions

A. EMT: Electrical metallic tubing.

B. ENT: Electrical nonmetallic tubing.

C. EPDM: Ethylene-propylene-diene terpolymer rubber.

D. FMC: Flexible metal conduit.

E. IMC: Intermediate metal conduit.

F. LFMC: Liquidtight flexible metal conduit.

G. LFNC: Liquidtight flexible nonmetallic conduit.

H. NBR: Acrylonitrile-butadiene rubber.

I. RNC: Rigid nonmetallic conduit.

1.4 Submittals

A. Product Data: For surface raceways, wireways and fittings, floor boxes, hinged-cover enclosures, and cabinets.

B. Shop Drawings: For the following raceway components. Include plans, elevations, sections, details, and attachments to other work.
   1. Custom enclosures and cabinets.

2. For handholes and boxes for underground wiring, including the following:
   a. Duct entry provisions, including locations and duct sizes.
   b. Frame and cover design.
   c. Grounding details.
   d. Dimensioned locations of cable rack inserts, and pulling-in and lifting irons.
   e. Joint details.

C. Coordination Drawings: Conduit routing plans, drawn to scale, on which the following items are shown and coordinated with each other, based on input from installers of the items involved:
   1. Structural members in the paths of conduit groups with common supports.

D. Manufacturer Seismic Qualification Certification: Submit certification that enclosures and cabinets and their mounting provisions, including those for internal components, will withstand seismic forces defined in Division 26 Section "Vibration and Seismic Controls for Electrical Systems." Include the following:
   1. Basis for Certification: Indicate whether withstand certification is based on actual test of assembled components or on calculation.
      a. The term "withstand" means "the cabinet or enclosure will remain in place without separation of any parts when subjected to the seismic forces specified.
   2. Dimensioned Outline Drawings of Equipment Unit: Identify center of gravity and locate and describe mounting and anchorage provisions.
   3. Detailed description of equipment anchorage devices on which the certification is based and their installation requirements.

E. Qualification Data: For professional engineer and testing agency.

F. Source quality-control test reports.

1.5 Quality Assurance

A. Electrical Components, Devices, and Accessories: Listed and labeled as defined in NFPA 70, Article 100, by a testing agency acceptable to authorities having jurisdiction, and marked for intended use.

B. Comply with NFPA 70.

PART 2 - PRODUCTS

2.1 Metal Conduit And Tubing

A. Available Manufacturers: Subject to compliance with requirements, manufacturers offering products that may be incorporated into the Work include, but are not limited to, the following:

1. AFC Cable Systems, Inc.
2. Alflex Inc.
3. Allied Tube & Conduit; a Tyco International Ltd. Co.
4. Anamet Electrical, Inc.; Anaconda Metal Hose.
5. Electri-Flex Co.
6. Manhattan/CDT/Cole-Flex.
7. Maverick Tube Corporation.
8. O-Z Gedney; a unit of General Signal.
9. Wheatland Tube Company.
10. Approved Equal

B. Rigid Steel Conduit: ANSI C80.1.

C. Aluminum Rigid Conduit: ANSI C80.5.

D. EMT: ANSI C80.3.

E. FMC: Zinc-coated steel or aluminum.

F. LFMC: Flexible steel conduit with PVC jacket.

G. Fittings for Conduit (Including all Types and Flexible and Liquidtight), EMT, and Cable: NEMA FB 1; listed for type and size raceway with which used, and for application and environment in which installed.
1. Fittings for EMT: Steel, set-screw type.

H. Joint Compound for Rigid Steel Conduit or IMC: Listed for use in cable connector assemblies, and compounded for use to lubricate and protect threaded raceway joints from corrosion and enhance their conductivity.

2.2 Nonmetallic Conduit And Tubing

A. Available Manufacturers: Subject to compliance with requirements, manufacturers offering products that may be incorporated into the Work include, but are not limited to, the following:
1. AFC Cable Systems, Inc.
2. Anamet Electrical, Inc.; Anaconda Metal Hose.
3. Arnco Corporation.
4. CANTEX Inc.
5. CertainTeed Corp.; Pipe & Plastics Group.
6. Condux International, Inc.
7. ElecSYS, Inc.
8. Electri-Flex Co.
9. Lamson & Sessions; Carlon Electrical Products.
10. Manhattan/CDT/Cole-Flex.
11. RACO; a Hubbell Company.

12. Thomas & Betts Corporation.
13. Approved Equal

B. ENT: NEMA TC 13.

C. RNC: NEMA TC 2, Type EPC-40-PVC, unless otherwise indicated.

D. LFNC: UL 1660.

E. Fittings for ENT and RNC: NEMA TC 3; match to conduit or tubing type and material.

F. Fittings for LFNC: UL 514B.

2.3 Boxes, Enclosures, And Cabinets

A. Available Manufacturers: Subject to compliance with requirements, manufacturers offering products that may be incorporated into the Work include, but are not limited to, the following:
1. Cooper Crouse-Hinds; Div. of Cooper Industries, Inc.
2. EGS/Appleton Electric.
3. Erickson Electrical Equipment Company.
4. Hoffman.
5. Hubbell Incorporated; Killark Electric Manufacturing Co. Division.
6. O-Z/Gedney; a unit of General Signal.
7. RACO; a Hubbell Company.
8. Robroy Industries, Inc.; Enclosure Division.
9. Scott Fetzer Co.; Adalet Division.
10. Spring City Electrical Manufacturing Company.
11. Thomas & Betts Corporation.
12. Woodhead, Daniel Company; Woodhead Industries, Inc. Subsidiary.
13. Approved Equal

B. Sheet Metal Outlet and Device Boxes: NEMA OS 1.

C. Cast-Metal Outlet and Device Boxes: NEMA FB 1, ferrous alloy, Type FD, with gasketed cover.

D. Nonmetallic Outlet and Device Boxes: NEMA OS 2.

E. Small Sheet Metal Pull and Junction Boxes: NEMA OS 1.

F. Cast-Metal Access, Pull, and Junction Boxes: NEMA FB 1, cast aluminum with gasketed cover.

G. Hinged-Cover Enclosures: NEMA 250, Type 1, with continuous-hinge cover with flush latch, unless otherwise indicated.
1. Metal Enclosures: Steel, finished inside and out with manufacturer's standard enamel.

H. Cabinets:

1. NEMA 250, Type 1, galvanized-steel box with removable interior panel and removable front, finished inside and out with manufacturer's standard enamel.
2. Hinged door in front cover with flush latch and concealed hinge.
3. Key latch to match panelboards.
4. Metal barriers to separate wiring of different systems and voltage.
5. Accessory feet where required for freestanding equipment.

2.4 Handholes And Boxes For Exterior Underground Wiring

A. Description: Comply with SCTE 77.
1. Color of Frame and Cover: Gray.
2. Configuration: Units shall be designed for flush burial and have open bottom, unless otherwise indicated.
3. Cover: Weatherproof, secured by tamper-resistant locking devices and having structural load rating consistent with enclosure.
4. Cover Finish: Nonskid finish shall have a minimum coefficient of friction of 0.50.
5. Cover Legend: Molded lettering, "ELECTRIC."
6. Conduit Entrance Provisions: Conduit-terminating fittings shall mate with entering ducts for secure, fixed installation in enclosure wall.

B. Polymer-Concrete Handholes and Boxes with Polymer-Concrete Cover: Molded of sand and aggregate, bound together with polymer resin, and reinforced with steel or fiberglass or a combination of the two.
1. Available Manufacturers: Subject to compliance with requirements, manufacturers offering products that may be incorporated into the Work include, but are not limited to, the following:
   a. Armorcast Products Company.
   b. Carson Industries LLC.
   c. CDR Systems Corporation.
   d. NewBasis.
   e. Approved Equal

2.5 Source Quality Control For Underground Enclosures

A. Handhole and Pull-Box Prototype Test: Test prototypes of handholes and boxes for compliance with SCTE 77. Strength tests shall be for specified tier ratings of products supplied.
1. Tests of materials shall be performed by a independent testing agency.
2. Strength tests of complete boxes and covers shall be by either an independent testing agency or manufacturer. A qualified registered professional engineer shall certify tests by manufacturer.
3. Testing machine pressure gages shall have current calibration certification complying with ISO 9000 and ISO 10012, and traceable to NIST standards.

PART 3 - EXECUTION

3.1 Raceway Application

A. See wiring methods indicated on drawings for raceway applications.

B. Minimum Raceway Size: 3/4-inch (21-mm) trade size.

C. Raceway Fittings: Compatible with raceways and suitable for use and location.
   1. Rigid and Intermediate Steel Conduit: Use threaded rigid steel conduit fittings, unless otherwise indicated.
   2. PVC Externally Coated, Rigid Steel Conduits: Use only fittings listed for use with that material. Patch and seal all joints, nicks, and scrapes in PVC coating after installing conduits and fittings. Use sealant recommended by fitting manufacturer.

D. Install nonferrous conduit or tubing for circuits operating above 60 Hz. Where aluminum raceways are installed for such circuits and pass through concrete, install in nonmetallic sleeve.

E. Do not install aluminum conduits in contact with concrete.

3.2 Installation Of Raceways

A. Comply with NECA 1 for installation requirements applicable to products specified in Part 2 except where requirements on Drawings or in this Article are stricter.

B. Complete raceway installation before starting conductor installation.

C. Arrange conduit to maintain headroom and present a neat appearance.

D. Arrange stub-ups so curved portions of bends are not visible above the finished slab.

E. All metal conduit, enclosures and raceways for conductors shall be mechanically joined together to form a continuous electrical continuity and bond. Provide grounding bushings on all conduits 1-1/4 inches and larger.

F. Conduits shall be in full lengths wherever possible and all ends shall be cut square, reamed and burred.

G. Bring conduit to the shoulder of fittings and couplings and fasten securely.

H. Use conduit bodies to make sharp changes in direction.

I. Use hydraulic one-shot conduit bender or factory elbows for bends in conduit larger than 2 inches in size.

J. The use of wooden plugs inserted in concrete or masonry units as base for fastenings conduits, tubing, boxes, cabinets, or other equipment shall be prohibited.

K. The installation of conduit or tubing which has been crushed or deformed shall be prohibited.

L. All conduits shall be plugged with approved discs during construction and be dry and clean before pulling wires.

M. Install conduit to prevent low spots which might accumulate water during or after installation. Where unavoidable, provide junction box with drain fitting at conduit low point.

N. Threaded Conduit Joints, Exposed to Wet, Damp, Corrosive, or Outdoor Conditions: Apply listed compound to threads of raceway and fittings before making up joints. Follow compound manufacturer's written instructions.

O. Raceway Terminations at Locations Subject to Moisture or Vibration: Use insulating bushings to protect conductors, including conductors smaller than No. 4 AWG.

P. Install pull wires in empty raceways. Use polypropylene or monofilament plastic line with not less than 200-lb (90-kg) tensile strength. Leave at least 12 inches (300 mm) of slack at each end of pull wire.

Q. Install raceway sealing fittings at suitable, approved, and accessible locations and fill them with listed sealing compound. For concealed raceways, install each fitting in a flush steel box with a blank cover plate having a finish similar to that of adjacent plates or surfaces. Install raceway sealing fittings at the following points:
   1. Where conduits pass from warm to cold locations, such as boundaries of refrigerated spaces.
   2. Where otherwise required by NFPA 70.

R. Expansion-Joint Fittings for RNC: Install in each run of aboveground conduit that is located where environmental temperature change may exceed 30 deg F (17 deg C), and that has straight-run length that exceeds 25 feet (7.6 m).
   1. Install fitting(s) that provide expansion and contraction for at least 0.00041 inch per foot of length of straight run per deg F (0.06 mm per meter of length of straight run per deg C) of temperature change.
   2. Install each expansion-joint fitting with position, mounting, and piston setting selected according to manufacturer's written instructions for conditions at specific location at the time of installation.

3.3 Installation Of Underground Conduit

A. Direct-Buried Conduit:
   1. Excavate trench bottom to provide firm and uniform support for conduit. Prepare trench and install backfill as shown on drawings.

2. After installing conduit, backfill and compact. Start at tie-in point, and work toward end of conduit run, leaving conduit at end of run free to move with expansion and contraction as temperature changes during this process. Firmly hand tamp backfill around conduit to provide maximum supporting strength. After placing controlled backfill to within 12 inches (300 mm) of finished grade, make final conduit connection at end of run and complete backfilling with normal compaction.
3. Install manufactured duct elbows for stub-ups at poles and equipment and at building entrances through the floor, unless otherwise indicated. Encase elbows for stub-up ducts throughout the length of the elbow.
4. Install manufactured rigid steel conduit elbows for stub-ups at poles and equipment and at building entrances through the floor.
    a. Couple steel conduits to ducts with adapters designed for this purpose, and encase coupling with 3 inches (75 mm) of concrete.
    b. For stub-ups at equipment mounted on outdoor concrete bases, extend steel conduit horizontally a minimum of 60 inches (1500 mm) from edge of equipment pad or foundation. Install insulated grounding bushings on terminations at equipment.
5. Install underground warning tape as specified in Division 26 "Identification for Electrical Systems".

3.4 Installation Of Underground Handholes And Boxes

A. Install handholes and boxes level and plumb and with orientation and depth coordinated with connecting conduits to minimize bends and deflections required for proper entrances.

B. Unless otherwise indicated, support units on a level bed of crushed stone or gravel, graded from 1/2-inch (12.5-mm) sieve to No. 4 (4.75-mm) sieve and compacted to same density as adjacent undisturbed earth.

C. Elevation: In paved areas, set so cover surface will be flush with finished grade. Set covers of other enclosures 1 inch (25 mm) above finished grade.

D. Install removable hardware, including pulling eyes, cable stanchions, cable arms, and insulators, as required for installation and support of cables and conductors and as indicated. Select arm lengths to be long enough to provide spare space for future cables, but short enough to preserve adequate working clearances in the enclosure.

E. Field-cut openings for conduits according to enclosure manufacturer's written instructions. Cut wall of enclosure with a tool designed for material to be cut. Size holes for terminating fittings to be used, and seal around penetrations after fittings are installed.

3.5 Identification

A. Apply identification to electrical raceway and boxes as specified in Division 26 "Identification for Electrical Systems".

3.6 Protection

A. Provide final protection and maintain conditions that ensure coatings, finishes, and cabinets are without damage or deterioration at time of Substantial Completion.
   1. Repair damage to galvanized finishes with zinc-rich paint recommended by manufacturer.
   2. Repair damage to PVC or paint finishes with matching touchup coating recommended by manufacturer.

END OF SECTION

SECTION 26 05 43 - UNDERGROUND DUCTS AND RACEWAYS FOR ELECTRICAL SYSTEMS

PART 1 - GENERAL

1.1 Related Documents

A. Drawings and general provisions of the Contract, including General and Supplementary Conditions and Division 01 Specification Sections, apply to this Section.

1.2 Summary

A. This Section includes the following:
   1. Conduit, ducts, and duct accessories for direct-buried and concrete-encased duct banks.
   2. Handholes and boxes.

1.3 Definition

A. RNC: Rigid nonmetallic conduit.

1.4 Submittals

A. Product Data: For the following:
   1. Duct-bank materials, including separators and miscellaneous components.
   2. Ducts and conduits and their accessories, including elbows, end bells, bends, fittings, and solvent cement.
   3. Accessories for handholes and boxes.
   4. Warning tape.

B. Shop Drawings for Factory-Fabricated Handholes and Boxes Other Than Precast Concrete: Include dimensioned plans, sections, and elevations, and fabrication and installation details, including the following:
   1. Duct entry provisions, including locations and duct sizes.
   2. Cover design.
   3. Grounding details.
   4. Dimensioned locations of cable rack inserts, and pulling-in and lifting irons.

C. Duct-Bank Coordination Drawings: Show duct profiles and coordination with other utilities and underground structures.
   1. Include plans and sections, drawn to scale, and show bends and locations of expansion fittings.
   2. Drawings shall be signed and sealed by a qualified professional engineer.

D. Product Certificates: For concrete and steel used in precast concrete handholes, as required by ASTM C 858.

E. Qualification Data: For professional engineer and testing agency.

F. Source quality-control test reports.

G. Field quality-control test reports.

1.5 Quality Assurance

A. Testing Agency Qualifications: Qualified according to ASTM E 329 for testing indicated.

B. Comply with ANSI C2.

C. Comply with NFPA 70.

1.6 Delivery, Storage, And Handling

A. Deliver ducts to Project site with ends capped. Store nonmetallic ducts with supports to prevent bending, warping, and deforming.

B. Store precast concrete and other factory-fabricated underground utility structures at Project site as recommended by manufacturer to prevent physical damage. Arrange so identification markings are visible.

C. Lift and support precast concrete units only at designated lifting or supporting points.

1.7 Project Conditions

A. Interruption of Existing Electrical Service: Do not interrupt electrical service to facilities occupied by Owner or others unless permitted under the following conditions and then only after arranging to provide temporary electrical service according to requirements indicated:
   1. Notify Engineer and Owner no fewer than seven (7) days in advance of proposed interruption of electrical service.
   2. Do not proceed with interruption of electrical service Owner's written permission.

1.8 Coordination

A. Coordinate layout and installation of ducts, handholes, and boxes with final arrangement of other utilities, site grading, and surface features as determined in the field.

B. Coordinate elevations of ducts and duct-bank entrances into handholes, and boxes with final locations and profiles of ducts and duct banks as determined by coordination with other utilities, underground obstructions, and surface features.

PART 2 - PRODUCTS

2.1 Conduit

A. Rigid Steel Conduit: Galvanized. Comply with ANSI C80.1.

B. RNC: NEMA TC 2, Type EPC-40-PVC, UL 651, with matching fittings by same manufacturer as the conduit, complying with NEMA TC 3 and UL 514B.

2.2 Nonmetallic Ducts And Duct Accessories

A. Available Manufacturers: Subject to compliance with requirements, manufacturers offering products that may be incorporated into the Work include, but are not limited to, the following:
1. ARNCO Corp.
2. Beck Manufacturing.
3. Cantex, Inc.
4. CertainTeed Corp.; Pipe & Plastics Group.
5. Condux International, Inc.
6. ElecSys, Inc.
7. Electri-Flex Company.
8. IPEX Inc.
9. Lamson & Sessions; Carlon Electrical Products.
10. Manhattan/CDT; a division of Cable Design Technologies.
11. Spiraduct/AFC Cable Systems, Inc.
12. Approved Equal.

B. Underground Plastic Utilities Duct: NEMA TC 6 & 8, Type EB-20-PVC, ASTM F 512, UL 651A, with matching fittings by the same manufacturer as the duct, complying with NEMA TC 9.

C. Underground Plastic Utilities Duct: NEMA TC 6 & 8, Type DB-60-PVC, ASTM F 512, with matching fittings by the same manufacturer as the duct, complying with NEMA TC 9.

D. Duct Accessories:
1. Duct Separators: Factory-fabricated rigid PVC interlocking spacers, sized for type and sizes of ducts with which used, and selected to provide minimum duct spacings indicated while supporting ducts during concreting or backfilling.
2. Warning Tape: Underground-line warning tape specified in Division 26 Section "Identification for Electrical Systems."

2.3 Handholes And Boxes Other Than Precast Concrete

A. Description: Comply with SCTE 77.
1. Color: Gray.
2. Configuration: Units shall be designed for flush burial and have open bottom, unless otherwise indicated.

3. Cover: Weatherproof, secured by tamper-resistant locking devices and having structural load rating consistent with enclosure.
4. Cover Finish: Nonskid finish shall have a minimum coefficient of friction of 0.50.
5. Cover Legend: Molded lettering, "ELECTRIC."
6. Direct-Buried Wiring Entrance Provisions: Knockouts equipped with insulated bushings or end-bell fittings, selected to suit box material, sized for wiring indicated, and arranged for secure, fixed installation in enclosure wall.
7. Duct Entrance Provisions: Duct-terminating fittings shall mate with entering ducts for secure, fixed installation in enclosure wall.

2.4 Source Quality Control

A. Test and inspect precast concrete utility structures according to ASTM C 1037.

B. Nonconcrete Handhole and Pull-Box Prototype Test: Test prototypes of manholes and boxes for compliance with SCTE 77. Strength tests shall be for specified tier ratings of products supplied.
1. Tests of materials shall be performed by a independent testing agency.
2. Strength tests of complete boxes and covers shall be by either an independent testing agency or the manufacturer. A qualified registered professional engineer shall certify tests by manufacturer.
3. Testing machine pressure gages shall have current calibration certification complying with ISO 9000 and ISO 10012, and traceable to NIST standards.

PART 3 - EXECUTION

3.1 Underground Duct Application

A. Ducts for Electrical Cables Over 600 V: RNC, NEMA Type EB-20-PVC, in concrete-encased duct bank, unless otherwise indicated.

B. Ducts for Electrical Feeders 600 V and Less: RNC**,** NEMA Type EPC-40-PVC, in direct-buried duct bank, unless otherwise indicated.

C. Ducts for Electrical Branch Circuits: RNC, NEMA Type EPC-40-PVC, in direct-buried duct bank, unless otherwise indicated.

3.2 Underground Enclosure Application

A. Handholes and Boxes for 600 V and Less:
1. AASHTO HB 17, H-20 structural load rating.

3.3 Earthwork

A. Excavation and Backfill: Comply with Division 31 Section "Earth Work," but do not use heavy-duty, hydraulic-operated, compaction equipment.

B. Restore surface features at areas disturbed by excavation and reestablish original grades, unless otherwise indicated. Replace removed sod immediately after backfilling is completed.

C. Restore areas disturbed by trenching, storing of dirt, cable laying, and other work. Restore vegetation and include necessary topsoiling, fertilizing, liming, seeding, sodding, sprigging, and mulching.

D. Cut and patch existing pavement in the path of underground ducts and utility structures according to Division 01 Section "Cutting and Patching."

3.4 Duct Installation

A. Slope: Pitch ducts a minimum slope of 1:300 down toward manholes and handholes and away from buildings and equipment. Slope ducts from a high point in runs between two manholes to drain in both directions.

B. Curves and Bends: Use 5-degree angle couplings for small changes in direction. Use manufactured long sweep bends with a minimum radius of 48 inches (1220 mm), both horizontally and vertically, at other locations, unless otherwise indicated.

C. Joints: Use solvent-cemented joints in ducts and fittings and make watertight according to manufacturer's written instructions. Stagger couplings so those of adjacent ducts do not lie in same plane.

D. Sealing: Provide temporary closure at terminations of ducts that have cables pulled. Seal spare ducts at terminations. Use sealing compound and plugs to withstand at least 15-psig (1.03-MPa) hydrostatic pressure.

E. Pulling Cord: Install 100-lbf- (445-N-) test nylon cord in ducts, including spares.

F. Concrete-Encased Ducts: Support ducts on duct separators.
   1. Separator Installation: Space separators close enough to prevent sagging and deforming of ducts, with not less than 4 spacers per 20 feet (6 m) of duct. Secure separators to earth and to ducts to prevent floating during concreting. Stagger separators approximately 6 inches (150 mm) between tiers. Tie entire assembly together using fabric straps; do not use tie wires or reinforcing steel that may form conductive or magnetic loops around ducts or duct groups.
   2. Concreting Sequence: Pour each run of envelope between manholes or other terminations in one continuous operation.
      a. Start at one end and finish at the other, allowing for expansion and contraction of ducts as their temperature changes during and after the pour. Use expansion fittings installed according to manufacturer's written recommendations, or use other specific measures to prevent expansion-contraction damage.

b. If more than one pour is necessary, terminate each pour in a vertical plane and install 3/4-inch (19-mm) reinforcing rod dowels extending 18 inches (450 mm) into concrete on both sides of joint near corners of envelope.

3. Pouring Concrete: Spade concrete carefully during pours to prevent voids under and between conduits and at exterior surface of envelope. Do not allow a heavy mass of concrete to fall directly onto ducts. Use a plank to direct concrete down sides of bank assembly to trench bottom. Allow concrete to flow to center of bank and rise up in middle, uniformly filling all open spaces. Do not use power-driven agitating equipment unless specifically designed for duct-bank application.
4. Reinforcement: Reinforce concrete-encased duct banks where they cross disturbed earth and where indicated. Arrange reinforcing rods and ties without forming conductive or magnetic loops around ducts or duct groups.
5. Forms: Use walls of trench to form side walls of duct bank where soil is self-supporting and concrete envelope can be poured without soil inclusions; otherwise, use forms.
6. Minimum Space between Ducts: 3 inches (75 mm) between ducts and exterior envelope wall, 2 inches (50 mm) between ducts for like services, and 4 inches (100 mm) between power and signal ducts.
7. Depth: Install top of duct bank at least 24 inches (600 mm) below finished grade in areas not subject to deliberate traffic, and at least 30 inches (750 mm) below finished grade in deliberate traffic paths for vehicles, unless otherwise indicated.
8. Stub-Ups: Use manufactured duct elbows for stub-ups at poles and equipment and at building entrances through the floor, unless otherwise indicated. Extend concrete encasement throughout the length of the elbow.
9. Stub-Ups: Use manufactured rigid steel conduit elbows for stub-ups at poles and equipment and at building entrances through the floor.
   a. Couple steel conduits to ducts with adapters designed for this purpose, and encase coupling with 3 inches (75 mm) of concrete.
   b. Stub-Ups to Equipment: For equipment mounted on outdoor concrete bases, extend steel conduit horizontally a minimum of 60 inches (1500 mm) from edge of base. Install insulated grounding bushings on terminations at equipment.
10. Warning Tape: Bury warning tape approximately 12 inches (300 mm) above all concrete-encased ducts and duct banks. Align tape parallel to and within 3 inches (75 mm) of the centerline of duct bank. Provide an additional warning tape for each 12-inch (300-mm) increment of duct-bank width over a nominal 18 inches (450 mm). Space additional tapes 12 inches (300 mm) apart, horizontally.

G. Direct-Buried Duct Banks:
1. Excavate trench bottom to provide firm and uniform support for duct bank. Prepare trench bottoms as specified in Division 31 Section "Earth Work" for pipes less than 6 inches (150 mm) in nominal diameter.
2. Install backfill as specified in Division 31 Section "Earth Work."
3. After installing first tier of ducts, backfill and compact. Start at tie-in point and work toward end of duct run, leaving ducts at end of run free to move with expansion and contraction as temperature changes during this process. Repeat procedure after placing each tier. After

placing last tier, hand-place backfill to 4 inches (100 mm) over ducts and hand tamp. Firmly tamp backfill around ducts to provide maximum supporting strength. Use hand tamper only. After placing controlled backfill over final tier, make final duct connections at end of run and complete backfilling with normal compaction as specified in Division 31 Section "Earth Work."

4. Install ducts with a minimum of 3 inches (75 mm) between ducts for like services and 6 inches (150 mm) between power and signal ducts.
5. Depth: Install top of duct bank at least 36 inches (900 mm) below finished grade, unless otherwise indicated.
6. Set elevation of bottom of duct bank below the frost line.
7. Install manufactured duct elbows for stub-ups at poles and equipment and at building entrances through the floor, unless otherwise indicated. Encase elbows for stub-up ducts throughout the length of the elbow.
8. Install manufactured rigid steel conduit elbows for stub-ups at poles and equipment and at building entrances through the floor.
   a. Couple steel conduits to ducts with adapters designed for this purpose, and encase coupling with 3 inches (75 mm) of concrete.
   b. For equipment mounted on outdoor concrete bases, extend steel conduit horizontally a minimum of 60 inches (1500 mm) from edge of equipment pad or foundation. Install insulated grounding bushings on terminations at equipment.

3.5 Installation Of Handholes, And Boxes

A. Precast Handhole Installation:
   1. Comply with ASTM C 891, unless otherwise indicated.
   2. Install unit's level and plumb and with orientation and depth coordinated with connecting ducts to minimize bends and deflections required for proper entrances.
   3. Unless otherwise indicated, support units on a level bed of crushed stone or gravel, graded from 1-inch (25-mm) sieve to No. 4 (4.75-mm) sieve and compacted to same density as adjacent undisturbed earth.

B. Elevations:
   1. Manhole Roof: Install with rooftop at least 15 inches (380 mm) below finished grade.
   2. Manhole Frame: In paved areas and trafficways, set frames flush with finished grade. Set other manhole frames 1 inch (25 mm) above finished grade.
   3. Handhole Covers: In paved areas and trafficways, set surface flush with finished grade. Set covers of other handholes 1 inch (25 mm) above finished grade.
   4. Where indicated, cast handhole cover frame integrally with handhole structure.

3.6 Grounding

A. Ground underground ducts and utility structures according to Division 26 Section "Grounding and Bonding for Electrical Systems."

3.7 Field Quality Control

A. Perform the following tests and inspections and prepare test reports:
   1. Demonstrate capability and compliance with requirements on completion of installation of underground ducts and utility structures.
   2. Pull aluminum or wood test mandrel through duct to prove joint integrity and test for out-of-round duct. Provide mandrel equal to 80 percent fill of duct. If obstructions are indicated, remove obstructions and retest.
   3. Test handhole grounding to ensure electrical continuity of grounding and bonding connections. Measure and report ground resistance as specified in Division 26 Section "Grounding and Bonding for Electrical Systems."

B. Correct deficiencies and retest as specified above to demonstrate compliance.

3.8 Cleaning

A. Pull leather-washer-type duct cleaner, with graduated washer sizes, through full length of ducts. Follow with rubber duct swab for final cleaning and to assist in spreading lubricant throughout ducts.

END OF SECTION

SECTION 26 05 53 - IDENTIFICATION FOR ELECTRICAL SYSTEMS

PART 1 - GENERAL

1.1 Related Documents

A. Drawings and general provisions of the Contract, including General and Supplementary Conditions and Division 01 Specification Sections, apply to this Section.

1.2 Summary

A. Section Includes:
1. Identification for raceways.
2. Identification of power and control cables.
3. Identification for conductors.
4. Underground-line warning tape.
5. Warning labels and signs.
6. Equipment identification labels.

1.3 Submittals

A. Product Data: For each electrical identification product indicated.

B. Samples: For each type of label and sign to illustrate size, colors, lettering style, mounting provisions, and graphic features of identification products.

C. Identification Schedule: An index of nomenclature of electrical equipment and system components used in identification signs and labels.

1.4 Quality Assurance

A. Comply with ANSI A13.1.

B. Comply with NFPA 70.

C. Comply with 29 CFR 1910.144 and 29 CFR 1910.145.

D. Comply with ANSI Z535.4 for safety signs and labels.

E. Adhesive-attached labeling materials, including label stocks, laminating adhesives, and inks used by label printers, shall comply with UL 969.

1.5 Coordination

A. Coordinate identification names, abbreviations, colors, and other features with requirements in other Sections requiring identification applications, Drawings, Shop Drawings, manufacturer's wiring diagrams, and the Operation and Maintenance Manual; and with those required by codes, standards, and 29 CFR 1910.145. Use consistent designations throughout Project.

B. Coordinate installation of identifying devices with completion of covering and painting of surfaces where devices are to be applied.

C. Coordinate installation of identifying devices with location of access panels and doors.

D. Install identifying devices before installing acoustical ceilings and similar concealment.

PART 2 - PRODUCTS

2.1 Power Raceway Identification Materials

A. Comply with ANSI A13.1 for minimum size of letters for legend and for minimum length of color field for each raceway size.

B. Colors for Raceways Carrying Circuits at 600 V or Less:
   1. Black letters on an orange field.
   2. Legend: Indicate voltage and system or service type.

C. Colors for Raceways Carrying Circuits at More Than 600 V:
   1. Black letters on an orange field.
   2. Legend: "DANGER CONCEALED HIGH VOLTAGE WIRING" with 3-inch- (75-mm-) high letters on 20-inch (500-mm) centers.

D. Self-Adhesive Vinyl Labels for Raceways Carrying Circuits at 600 V or Less: Preprinted, flexible label laminated with a clear, weather- and chemical-resistant coating and matching wraparound adhesive tape for securing ends of legend label.

E. Tape and Stencil for Raceways Carrying Circuits More Than 600 V: 4-inch- (100-mm-) wide black stripes on 10-inch (250-mm) centers diagonally over orange background that extends full length of raceway or duct and is 12 inches (300 mm) wide. Stop stripes at legends.

2.2 Power And Control Cable Identification Materials

A. Comply with ANSI A13.1 for minimum size of letters for legend and for minimum length of color field for each raceway and cable size.

B. Self-Adhesive Vinyl Labels: Preprinted, flexible label laminated with a clear, weather- and chemical-resistant coating and matching wraparound adhesive tape for securing ends of legend label.

2.3 Conductor Identification Materials

A. Color-Coding Conductor Tape: Colored, self-adhesive vinyl tape not less than 3 mils (0.08 mm) thick by 1 to 2 inches (25 to 50 mm) wide.

B. Self-Adhesive Vinyl Labels: Preprinted, flexible label laminated with a clear, weather- and chemical-resistant coating and matching wraparound adhesive tape for securing ends of legend label.

2.4 Underground-Line Warning Tape

A. Tape:
1. Recommended by manufacturer for the method of installation and suitable to identify and locate underground electrical utility lines.
2. Printing on tape shall be permanent and shall not be damaged by burial operations.
3. Tape material and ink shall be chemically inert, and not subject to degrading when exposed to acids, alkalis, and other destructive substances commonly found in soils.

B. Color and Printing:
1. Comply with ANSI Z535.1 through ANSI Z535.5.
2. Inscriptions for Red-Colored Tapes: ELECTRIC LINE, HIGH VOLTAGE.

C. Description: 6 inch wide plastic tape, magnetic detectable type, with suitable warning legend described above equal to Seton Name Plate Co. style 57360.

2.5 Warning Labels And Signs

A. Comply with NFPA 70 and 29 CFR 1910.145.

B. Self-Adhesive Warning Labels: Factory-printed, multicolor, pressure-sensitive adhesive labels, configured for display on front cover, door, or other access to equipment unless otherwise indicated.

C. Baked-Enamel Warning Signs:
1. Preprinted aluminum signs, punched or drilled for fasteners, with colors, legend, and size required for application.
2. 1/4-inch (6.4-mm) grommets in corners for mounting.
3. Nominal size, 7 by 10 inches (180 by 250 mm).

D. Metal-Backed, Butyrate Warning Signs:
1. Weather-resistant, nonfading, preprinted, cellulose-acetate butyrate signs with 0.0396-inch (1-mm) galvanized-steel backing; and with colors, legend, and size required for application.

2. 1/4-inch (6.4-mm) grommets in corners for mounting.
3. Nominal size, 10 by 14 inches (250 by 360 mm).

E. Warning label and sign shall include, but are not limited to, the following legends:
1. Multiple Power Source Warning: "DANGER - ELECTRICAL SHOCK HAZARD - EQUIPMENT HAS MULTIPLE POWER SOURCES."
2. Workspace Clearance Warning: "WARNING - OSHA REGULATION - AREA IN FRONT OF ELECTRICAL EQUIPMENT MUST BE KEPT CLEAR FOR 36 INCHES (915 MM)."

2.6 Equipment Identification Labels

A. Self-Adhesive, Engraved, Laminated Acrylic or Melamine Label: Adhesive backed, with white letters on a dark-gray background. Minimum letter height shall be 3/8 inch (10 mm).

2.7 Cable Ties

A. UV-Stabilized Cable Ties: Fungus inert, designed for continuous exposure to exterior sunlight, self extinguishing, one piece, self locking, Type 6/6 nylon.
1. Minimum Width: 3/16 inch (5 mm).
2. Tensile Strength at 73 deg F (23 deg C), According to ASTM D 638: 12,000 psi (82.7 MPa).
3. Temperature Range: Minus 40 to plus 185 deg F (Minus 40 to plus 85 deg C).
4. Color: Black.

2.8 Miscellaneous Identification Products

A. Fasteners for Labels and Signs: Self-tapping, stainless-steel screws or stainless-steel machine screws with nuts and flat and lock washers.

PART 3 - EXECUTION

3.1 Installation

A. Verify identity of each item before installing identification products.

B. Apply identification devices to surfaces that require finish after completing finish work.

C. Self-Adhesive Identification Products: Clean surfaces before application, using materials and methods recommended by manufacturer of identification device.

D. Attach signs and plastic labels that are not self-adhesive type with mechanical fasteners appropriate to the location and substrate.

E. System Identification Color-Coding Bands for Raceways and Cables: Each color-coding band shall completely encircle cable or conduit. Place adjacent bands of two-color markings in contact, side

by side. Locate bands at changes in direction, at penetrations of walls and floors, at 50-foot (15-m) maximum intervals in straight runs, and at 25-foot (7.6-m) maximum intervals in congested areas.

F. Aluminum Wraparound Marker Labels and Metal Tags: Secure tight to surface of conductor or cable at a location with high visibility and accessibility.

G. Cable Ties: For attaching tags. Use general-purpose type, except as listed below:
1. Outdoors: UV-stabilized nylon.

H. Underground-Line Warning Tape: During backfilling of trenches install continuous underground-line warning tape directly above line at 12 inches (300 mm) below finished grade. Use multiple tapes where width of multiple lines installed in a common trench or concrete envelope exceeds 16 inches (400 mm) overall.

3.2 Identification Schedule

A. Accessible Raceways and Metal-Clad Cables, 600 V or Less, for Circuits More Than 20A, and 120V to ground: Identify with self-adhesive vinyl label at 10-foot (3-m) maximum intervals.

B. Accessible Raceways and Cables within Buildings: Identify the covers of each junction and pull box of the following systems with self-adhesive vinyl labels with the wiring system legend and system voltage.

C. Power-Circuit Conductor Identification, 600 V or Less: For conductors in vaults, pull and junction boxes, manholes, and handholes, use color-coding conductor tape to identify the phase.
1. Color-Coding for Phase and Voltage Level Identification, 600 V or Less: Use colors listed below for ungrounded conductors.
   a. Color shall be factory applied or field applied for sizes larger than No. 8 AWG, if authorities having jurisdiction permit.
   b. Colors for 208/120-V Circuits:
      1) Phase A: Black.
      2) Phase B: Red.
      3) Phase C: Blue.
   c. Colors for 480/277-V Circuits:
      1) Phase A: Brown.
      2) Phase B: Orange.
      3) Phase C: Yellow.
   d. Field-Applied, Color-Coding Conductor Tape: Apply in half-lapped turns for a minimum distance of 6 inches (150 mm) from terminal points and in boxes where splices or taps are made. Apply last two turns of tape with no tension to prevent possible unwinding. Locate bands to avoid obscuring factory cable markings.

D. Install instructional sign including the color-code for grounded and ungrounded conductors using adhesive-film-type labels.

E. Locations of Underground Lines: Identify with underground-line warning tape for power, lighting, communication, and control wiring and optical fiber cable.

F. Warning Labels for Indoor Cabinets, Boxes, and Enclosures for Power and Lighting: Self-adhesive warning labels.
   1. Comply with 29 CFR 1910.145.
   2. Identify system voltage with black letters on an orange background.
   3. Apply to exterior of door, cover, or other access.
   4. For equipment with multiple power or control sources, apply to door or cover of equipment including.

G. Operating Instruction Signs: Install instruction signs to facilitate proper operation and maintenance of electrical systems and items to which they connect. Install instruction signs with approved legend where instructions are needed for system or equipment operation.

H. Equipment Identification Labels: On each unit of equipment, install unique designation label that is consistent with wiring diagrams, schedules, and the Operation and Maintenance Manual. Apply labels to disconnect switches and protection equipment, central or master units, control panels, control stations, terminal cabinets, and racks of each system. Systems include power, lighting, control, communication, signal, monitoring, and alarm systems unless equipment is provided with its own identification.

END OF SECTION

SECTION 26 12 00 – MEDIUM VOLTAGE TRANSFORMER

PART 1 - GENERAL

1.1 Scope

A. This specification covers the electrical and mechanical characteristics for Three-Phase Pad-Mounted Distribution Transformer.

1.2 Applicable Standards

A. All characteristics, definitions, and terminology, except as specifically covered in this specification, shall be in accordance with the latest revision of the following ANSI/IEEE, NEMA, and Department of Energy standards.

1. C57.12.00 – IEEE Standard for Standard General Requirements for Liquid-Immersed Distribution, Power, and Regulating Transformers.
2. C57.12.28 – Pad-Mounted Equipment - Enclosure Integrity.
3. C57.12.34 – IEEE Standard Requirements for Pad-Mounted, Compartmental-Type, Self-Cooled, Three-Phase Distribution Transformers (2500 kVA and Smaller) - High Voltage: 34500GrdY/19920 Volts and Below; Low-Voltage: 480 Volt 2500 kVA and Smaller *(issued in March 2005 - combines C57.12.22 and C57.12.26).*
4. C57.12.90 – IEEE Standard Test Code for Liquid-Immersed Distribution, Power, and Regulating Transformers and IEEE Guide for Short-Circuit Testing of Distribution and Power Transformers.
5. C57.12.91 – Guide for Loading Mineral-Oil-Immersed Transformers.
6. NEMA TR 1-1993 (R2000) – Transformers, Regulators and Reactors, Table 0-2 Audible Sound Levels for Liquid-Immersed Power Transformers.
7. NEMA 260-1996 (2004) – Safety Labels for Pad-Mounted Switchgear and Transformers Sited in Public Areas.
8. 10 CFR Part 431 – Department of Energy – Energy Conservation Program for Commercial Equipment: Distribution Transformers Energy Conservation Standards; Final Rule.

1.3 Approved Manufacturers

A. Cooper Power Systems, Howard Transformer or approved equal.

1.4 Production Testing

A. All units shall be tested for the following:
1. No-Load (85°C or 20°C) losses at rated current
2. Total (85°C) losses at rated current
3. Percent Impedance (85°C) at rated current
4. Excitation current (100% voltage) test

5. Winding resistance measurement tests
6. Ratio tests using all tap settings
7. Polarity and phase relation tests
8. Induced potential tests
9. Full wave and reduced wave impulse test

B. Minimally, transformers shall conform to efficiency levels for liquid immersed distribution transformers, as specified in Table I.1 of the Department of Energy ruling. "10 CFR Part 431 Energy Conservation Program for Commercial Equipment: Distribution Transformers Energy Conservation Standards; Final Rule; October 12, 2007." Manufacturer shall comply with the intent of all regulations set forth in noted ruling. This efficiency standard does not apply to step-up transformers.

C. In addition, the manufacturer shall provide certification upon request for all design and other tests listed in C57.12.00, including verification that the design has passed short circuit criteria per ANSI C57.12.00 and C57.12.90.

D. In the event of proposal bid evaluated with guaranteed losses due to a loss evaluation (see section 10.0), manufacturer shall conform to guaranteed average losses as specified in ANSI C57.12.00. The no-load losses of a transformer shall not exceed the specified no-load losses by more than 10%, and the total losses of a transformer shall not exceed the specified total losses by more than 6%.

E. Provide loop through configuration and lightning arrestors in primary component.

1.5 Data With Proposal

A. The following data shall be submitted with the proposal:
1. Core losses
2. Winding losses
3. Percent Impedance
4. Typical bid drawing
5. Approval drawing – drawings shall show final dimensions and features. When requested, approval drawings shall be provided per quoted lead time.
6. Record Drawing – drawings shall show final dimensions and features. When requested, record drawings shall be provided.

PART 2 - PRODUCTS

2.1 Ratings

A. The transformer shall be designed in accordance with this specification and the kVA rating shall be: 500 kVA

B. The primary voltage, configuration, and the basic lightning impulse insulation level (BIL) shall be 13,800 volt delta with 60 BIL stepping down to 480 volts wye with 125 kV BIL .

C. The transformer shall be furnished with full capacity high-voltage taps. The tap changer shall be clearly labeled to reflect that the transformer must be de-energized before operating the tap changer as required in Section 4.3 of ANSI C57.12.34. The unit shall have the following tap configurations:

D. Two – 2 ½% taps above and below rated voltage.

E. The average winding temperature rise above ambient temperature, when tested at the transformer rating, shall not exceed 65°C at the base transformer rating, shall not exceed 55°C, and when tested at 112% of the base rating, shall not exceed 65°C.

F. The percent impedance voltage shall be 5.75.

2.2 Construction

A. The core and coil shall be vacuum processed to ensure maximum penetration of insulating fluid into the coil insulation system. While under vacuum, the windings will be energized to heat the coils and drive out moisture, and the transformer will be filled with preheated filtered degassed insulating fluid. The core shall be manufactured from burr-free, grain-oriented silicon steel and shall be precisely stacked to eliminate gaps in the corner joints. The coil shall be insulated with B-stage, epoxy coated, diamond pattern, insulating paper, which shall be thermally cured under pressure to ensure proper bonding of conductor and paper. Coils shall be either aluminum or copper (eliminate a metal if one is required over the other).

B. The dielectric coolant shall be listed less-flammable fluid meeting the requirements of National Electrical Code Section 450-23 and the requirements of the National Electrical Safety Code (IEEE C2-2002), Section 15. The dielectric coolant shall be non-toxic*, non-bioaccumulating and be readily and completely biodegradable per EPA OPPTS 835.3100. The base fluid shall be 100% derived from edible seed oils and food grade performance enhancing additives. The fluid shall not require genetically altered seeds for its base oil. The fluid shall result in zero mortality when tested on trout fry *. The fluid shall be certified to comply with the US EPA Environmental Technology Verification (ETV) requirements, and tested for compatibility with transformer components. The fluid shall be Factory Mutual Approved, UL Classified Dielectric Medium (UL-EOUV) and UL Classified Transformer Fluid (UL-EOVK), Envirotemp® FR3 fluid. *(Per OECD G.L. 203)

C. Tank and Cabinet Enclosure
   1. The high-voltage compartments, shall be separated by a metal barrier, shall be located side-by-side on one side of the transformer tank. When viewed from the front, the incoming compartment shall be on the right. Each compartment shall have a door that is constructed so as to provide access to one compartment only after the door to the other compartment has been opened. There shall be one or more additional fastening devices that must be removed before the high-voltage doors can be opened.
   2. A recessed, captive, penta-head or hex-head bolt that meets the dimensions per ANSI C57.12.28 shall secure all access doors.
   3. The compartment depth shall be in accordance with C57.12.34, unless additional depth is specified.

4. The tank base must be designed to allow skidding or rolling in any direction. Lifting provisions shall consist of four lifting lugs welded to the tank.
5. The tank shall be constructed to withstand 7 psi without permanent deformation, and 15 psi without rupture. The tank shall include a 15 psig pressure relief valve with a flow rate of minimum 35 SCFM.
6. The exterior of the unit shall be painted Munsell 7GY3.29/1.5 green (STD), ANSI 70 gray, or ANSI 61 gray in color. If a special paint color is specified, a federal spec number or paint chip must be provided at the time of order. The cabinet interior and front plate shall be painted gray for ease of viewing the inside compartment.
7. The tank shall be complete with an anodized aluminum laser engraved nameplate. This nameplate shall meet Nameplate B per ANSI C57.12.00.

D. High Voltage Bushings and Terminals
1. High voltage bushings will be installed in the high voltage termination compartment located on the front left of the transformer and requiring access via the low voltage termination compartment on the front right.
2. Bushing Style
   15/25 KV DEADFRONT, CURRENTS BELOW 200 AMPS: The high voltage bushings shall be 15/25 kV 200A bushing wells with bushing well inserts installed.
3. Bushing Configuration
   15/25 KV RADIAL FEED DEADFRONT: The transformer shall be provided with six (6) high voltage bushings; 3 for conductors, 3 for lightning arrestor.

E. Overcurrent Protection
1. Under-oil partial-range current-limiting back-up fuses with an interrupting rating of 50,000 A.

F. Overvoltage Protection
1. The overvoltage protection scheme provided with the transformer shall protect the high-voltage windings.

   DEAD-FRONT BUSHINGS: (maximum 150 kV BIL, for voltages up to 18 kV delta and 35 kV grounded wye). Externally mounted, Distribution Class M.O.V.E. Dead-front elbow arresters shall be supplied.

G. Accessories
1. The following accessories and options shall be provided:
2. Welded main tank cover with bolted hand hole (1500 kVA & above)
3. 1.0" upper fill plug
4. 1.0" drain plug
5. 1.0" drain valve w/ sampling device.
6. Automatic pressure relief valve
7. Metal drip shield (when bayonets specified)
8. Ground provisions per C57.12.34 section 9.11.
9. Meet NEMA TR-1 sound levels

10. Liquid level gauge
11. Dial-type thermometer gauge
12. Pressure vacuum gauge
13. Mr. Ouch warning & danger signs
14. Danger high voltage warning signs
15. Non-PCB decal
16. Touch-up paint
17. Combination UL Listed & Classified transformer (to comply with NEC 450-23 listing restrictions for installations on, near, or inside of buildings) per UL XPLH
18. UL Listed transformer (certifying compliance with ANSI standards only) per UL XPLH

2.3 Labeling

A. A temporary bar code label shall be attached to the exterior of the transformer in accordance with ANSI C57.12.34.

2.4 Finish Performance Requirements

A. The tank coating shall meet all requirements in ANSI C57.12.28 including:
   1. Salt Spray
   2. Crosshatch adhesion
   3. Humidity
   4. Impact
   5. Oil resistance
   6. Ultraviolet accelerated weathering
   7. Abrasion resistance

B. The enclosure integrity of the tank and cabinet shall meet the requirements for tamper resistance set forth in ANSI C57.12.28 including but not limited to the pry test, pull test, and wire probe test.

PART 3 - EXECUTION

3.1 Shipping

3.2 Service

A. The manufacturer of the transformer shall have regional service centers located within 2 hours flight time of all contiguous 48 states. Service personnel shall be factory trained in commissioning and routine service of quoted transformers.

END OF SECTION

SECTION 26 22 00 - LOW-VOLTAGE TRANSFORMERS

PART 1 - GENERAL

1.1 Related Documents

A. Drawings and general provisions of the Contract, including General and Supplementary Conditions and Division 01 Specification Sections, apply to this Section.

1.2 Summary

A. This Section includes the following types of dry-type transformers rated 600 V and less, with capacities up to 1000 kVA:
   1. Distribution transformers.

1.3 Submittals

A. Product Data: Include rated nameplate data, capacities, weights, dimensions, minimum clearances, installed devices and features, and performance for each type and size of transformer indicated.

B. Shop Drawings: Detail equipment assemblies and indicate dimensions, weights, loads, required clearances, method of field assembly, components, and location and size of each field connection.
   1. Wiring Diagrams: Power, signal, and control wiring.

C. Qualification Data: For testing agency.

D. Source quality-control test reports.

E. Field quality-control test reports.

F. Operation and Maintenance Data: For transformers to include in emergency, operation, and maintenance manuals.

1.4 Quality Assurance

A. Source Limitations: Obtain each transformer type through one source from a single manufacturer.

B. Electrical Components, Devices, and Accessories: Listed and labeled as defined in NFPA 70, Article 100, by a testing agency acceptable to authorities having jurisdiction, and marked for intended use.

C. Comply with IEEE C57.12.91, "Test Code for Dry-Type Distribution and Power Transformers."

1.5 Delivery, Storage, And Handling

A. Temporary Heating: Apply temporary heat according to manufacturer's written instructions within the enclosure of each ventilated-type unit, throughout periods during which equipment is not energized and when transformer is not in a space that is continuously under normal control of temperature and humidity.

PART 2 - PRODUCTS

2.1 Manufacturers

A. Available Manufacturers: Subject to compliance with requirements, manufacturers offering products that may be incorporated into the Work include, but are not limited to, the following:
1. ACME Electric Corporation; Power Distribution Products Division.
2. Challenger Electrical Equipment Corp.; a division of Eaton Corp.
3. Controlled Power Company.
4. Eaton Electrical Inc.; Cutler-Hammer Products.
5. Federal Pacific Transformer Company; Division of Electro-Mechanical Corp.
6. General Electric Company.
7. Hammond Co.; Matra Electric, Inc.
8. Magnetek Power Electronics Group.
9. Micron Industries Corp.
10. Myers Power Products, Inc.
11. Siemens Energy & Automation, Inc.
12. Sola/Hevi-Duty.
13. Square D; Schneider Electric.
14. Approved Equal.

2.2 General Transformer Requirements

A. Description: Factory-assembled and -tested, air-cooled units for 60-Hz service.

B. Cores: Grain-oriented, non-aging silicon steel.

C. Coils: Continuous windings without splices except for taps.
1. Internal Coil Connections: Brazed or pressure type.
2. Coil Material: Copper.

D. Labeling: Comply with NEMA TP3.

E. Accessories: Provide all necessary lugs, accessories and mounting hardware necessary for proper installation and operation.

2.3 Distribution Transformers

A. Comply with NEMA ST 20, and list and label as complying with UL 1561.

B. Provide transformers that are constructed to withstand seismic forces specified in Division 26 Section "Vibration and Seismic Controls for Electrical Systems."

C. Cores: One leg per phase.
   1. Core assemblies shall be grounded to their enclosures by adequate flexible, ground straps.

D. Enclosure: Ventilated, NEMA 250, Type 3R.
   1. Core and coil shall be encapsulated within resin compound, sealing out moisture and air.

E. Taps for Transformers Smaller Than 3 kVA: One 5 percent tap above normal full capacity.

F. Taps for Transformers 7.5 to 24 kVA: Two 5 percent taps below rated voltage.

G. Taps for Transformers 25 kVA and Larger: Two 2.5 percent taps above and four 2.5 percent taps below normal full capacity.

H. Insulation Class: 220 deg C, UL-component-recognized insulation system with a maximum of 150 deg C rise above 40 deg C ambient temperature.

I. Energy Efficiency for Transformers Rated 15 kVA and Larger:
   1. Complying with NEMA TP 1, Class 1 efficiency levels.
   2. Complying with Federal law 10 CFR Part 431.
   3. Tested according to NEMA TP 2.

J. Low-Sound-Level Requirements: Maximum sound levels, when factory tested according to IEEE C57.12.91, as follows:
   1. 9 kVA and Less: 40 dBA.
   2. 10 to 50 kVA: 45 dBA.
   3. 51 to 150 kVA: 50 dBA.
   4. 151 to 300 kVA: 55 dBA.
   5. 301 to 500 kVA: 60 dBA.

2.4 Identification Devices

A. Nameplates: Engraved, laminated-plastic or metal nameplate for each transformer, mounted with corrosion-resistant screws. Nameplates and label products are specified in Division 26 Section "Identification for Electrical Systems."

2.5 Source Quality Control

A. Test and inspect transformers according to IEEE C57.12.91.

PART 3 - EXECUTION

3.1 Examination

A. Examine conditions for compliance with enclosure- and ambient-temperature requirements for each transformer.

B. Verify that field measurements are as needed to maintain working clearances required by NFPA 70 and manufacturer's written instructions.

C. Examine walls, floors, roofs, and concrete bases for suitable mounting conditions where transformers will be installed.

D. Verify that ground connections are in place and requirements in Division 26 Section "Grounding and Bonding for Electrical Systems" have been met. Maximum ground resistance shall be 5 ohms at location of transformer.

E. Proceed with installation only after unsatisfactory conditions have been corrected.

3.2 Installation

A. Install wall-mounting transformers level and plumb with wall brackets fabricated by transformer manufacturer.

B. Construct concrete bases and anchor floor-mounting transformers according to manufacturer's written instructions.

3.3 Connections

A. Ground equipment according to Division 26 Section "Grounding and Bonding for Electrical Systems."

B. Connect wiring according to Division 26 Section "Low-Voltage Electrical Power Conductors and Cables."

3.4 Field Quality Control

A. Testing Agency: Engage a qualified testing agency to perform tests and inspections and prepare test reports.

B. Manufacturer's Field Service: Engage a factory-authorized service representative to inspect, test, and adjust components, assemblies, and equipment installations, including connections. Report results in writing.

C. Perform tests and inspections and prepare test reports.

1. Manufacturer's Field Service: Engage a factory-authorized service representative to inspect components, assemblies, and equipment installations, including connections, and to assist in testing.

D. Tests and Inspections:
   1. Perform each visual and mechanical inspection and electrical test stated in NETA Acceptance Testing Specification. Certify compliance with test parameters.

E. Remove and replace units that do not pass tests or inspections and retest as specified above.

F. Test Labeling: On completion of satisfactory testing of each unit, attach a dated and signed "Satisfactory Test" label to tested component.

3.5 Adjusting

A. Record transformer secondary voltage at each unit for at least 48 hours of typical occupancy period. Adjust transformer taps to provide optimum voltage conditions at secondary terminals. Optimum is defined as not exceeding nameplate voltage plus 10 percent and not being lower than nameplate voltage minus 3 percent at maximum load conditions. Submit recording and tap settings as test results.

B. Output Settings Report: Prepare a written report recording output voltages and tap settings.

3.6 Cleaning

A. Vacuum dirt and debris; do not use compressed air to assist in cleaning.

END OF SECTION

SECTION 26 24 16 - PANELBOARDS

PART 1 - GENERAL

1.1 Related Documents

A. Drawings and general provisions of the Contract, including General and Supplementary Conditions and Division 01 Specification Sections, apply to this Section.

1.2 Summary

A. Section Includes:
   1. Lighting and appliance branch-circuit panelboards.

1.3 Definitions

A. SVR: Suppressed voltage rating.

B. TVSS: Transient voltage surge suppressor.

1.4 Submittals

A. Product Data: For each type of panelboard, switching and overcurrent protective device, transient voltage suppression device, accessory, and component indicated. Include dimensions and manufacturers' technical data on features, performance, electrical characteristics, ratings, and finishes.

B. Shop Drawings: For each panelboard and related equipment.
   1. Include dimensioned plans, elevations, sections, and details. Show tabulations of installed devices, equipment features, and ratings.
   2. Detail enclosure types and details for types other than NEMA 250, Type 1.
   3. Detail bus configuration, current, and voltage ratings.
   4. Short-circuit current rating of panelboards and overcurrent protective devices.
   5. Include evidence of NRTL listing for series rating of installed devices.
   6. Detail features, characteristics, ratings, and factory settings of individual overcurrent protective devices and auxiliary components.
   7. Include wiring diagrams for power, signal, and control wiring.
   8. Include time-current coordination curves for each type and rating of overcurrent protective device included in panelboards. Include selectable ranges for each type of overcurrent protective device.

C. Qualification Data: For qualified testing agency.

D. Field Quality-Control Reports:

1. Test procedures used.
2. Test results that comply with requirements.
3. Results of failed tests and corrective action taken to achieve test results that comply with requirements.

E. Operation and Maintenance Data: For panelboards and components to include in emergency, operation, and maintenance manuals. In addition to items specified in Division 01 Section "Operation and Maintenance Data," include the following:
1. Manufacturer's written instructions for testing and adjusting overcurrent protective devices.
2. Time-current curves, including selectable ranges for each type of overcurrent protective device that allows adjustments.

1.5 Quality Assurance

A. Testing Agency Qualifications: Member company of NETA or an NRTL.
1. Testing Agency's Field Supervisor: Currently certified by NETA to supervise on-site testing.

B. Source Limitations: Obtain panelboards, overcurrent protective devices, components, and accessories from single source from single manufacturer.

C. Product Selection for Restricted Space: Drawings indicate maximum dimensions for panelboards including clearances between panelboards and adjacent surfaces and other items. Comply with indicated maximum dimensions.

D. Electrical Components, Devices, and Accessories: Listed and labeled as defined in NFPA 70, by a qualified testing agency, and marked for intended location and application.

E. Comply with NEMA PB 1.

F. Comply with NFPA 70.

1.6 Delivery, Storage, And Handling

A. Remove loose packing and flammable materials from inside panelboards; install temporary electric heating (250 W per panelboard) to prevent condensation.

B. Handle and prepare panelboards for installation according to NECA 407 and NEMA PB 1.

1.7 Project Conditions

A. Environmental Limitations:
1. Do not deliver or install panelboards until spaces are enclosed and weathertight, wet work in spaces is complete and dry, work above panelboards is complete, and temporary HVAC system is operating and maintaining ambient temperature and humidity conditions at occupancy levels during the remainder of the construction period.

B. Service Conditions: NEMA PB 1, usual service conditions, as follows:
   1. Ambient temperatures within limits specified.
   2. Altitude not exceeding 6600 feet (2000 m).

C. Interruption of Existing Electric Service: Do not interrupt electric service to facilities occupied by Owner or others unless permitted under the following conditions and then only after arranging to provide temporary electric service according to requirements indicated:
   1. Notify Engineer and Owner no fewer than seven (7) days in advance of proposed interruption of electric service.
   2. Do not proceed with interruption of electric service without Owner's written permission.
   3. Comply with NFPA 70E.

1.8 Coordination

A. Coordinate layout and installation of panelboards and components with other construction that penetrates walls or is supported by them, including electrical and other types of equipment, raceways, piping, encumbrances to workspace clearance requirements, and adjacent surfaces. Maintain required workspace clearances and required clearances for equipment access doors and panels.

1.9 Warranty

A. Special Warranty: Manufacturer's standard form in which manufacturer agrees to repair or replace transient voltage suppression devices that fail in materials or workmanship within specified warranty period.
   1. Warranty Period: Five years from date of Substantial Completion.

1.10 Extra Materials

A. Furnish extra materials that match products installed and that are packaged with protective covering for storage and identified with labels describing contents.
   1. Keys: Two spares for each type of panelboard cabinet lock.

PART 2 - PRODUCTS

2.1 General Requirements For Panelboards

A. Enclosures: Flush- or surface-mounted cabinets as indicated on drawings.
   1. Rated for environmental conditions at installed location.
      a. Indoor Dry and Clean Locations: NEMA 250, Type 1.
      b. Outdoor Locations: NEMA 250, Type 3R.
   2. Hinged Front Cover: Entire front trim hinged to box and with standard door within hinged trim cover.
   3. Finishes:

a. Panels and Trim: Steel, factory finished immediately after cleaning and pretreating with manufacturer's standard two-coat, baked-on finish consisting of prime coat and thermosetting topcoat.
b. Back Boxes: Galvanized steel.
c. Fungus Proofing: Permanent fungicidal treatment for overcurrent protective devices and other components.

4. Directory Card: Inside panelboard door, mounted in transparent card holder.

B. Phase, Neutral, and Ground Buses:
1. Material: Hard-drawn copper, 98 percent conductivity.
2. Equipment Ground Bus: Adequate for feeder and branch-circuit equipment grounding conductors; bonded to box.

C. Conductor Connectors: Suitable for use with conductor material and sizes.
1. Material: Hard-drawn copper, 98 percent conductivity.
2. Main and Neutral Lugs: Mechanical type.
3. Ground Lugs and Bus-Configured Terminators: Mechanical type.
4. Feed-Through Lugs: Mechanical type, suitable for use with conductor material. Locate at opposite end of bus from incoming lugs or main device.
5. Subfeed (Double) Lugs: Mechanical type suitable for use with conductor material. Locate at same end of bus as incoming lugs or main device.

D. Future Devices: Mounting brackets, bus connections, filler plates, and necessary appurtenances required for future installation of devices.

E. Panelboard Short-Circuit Current Rating: Rated for series-connected system with integral or remote upstream overcurrent protective devices and labeled by an NRTL. Include size and type of allowable upstream and branch devices, listed and labeled for series-connected short-circuit rating by an NRTL.

F. Panelboard Short-Circuit Current Rating: Fully rated to interrupt symmetrical short-circuit current available at terminals.

2.2 Lighting And Appliance Branch-Circuit Panelboards

A. Manufacturers: Subject to compliance with requirements, provide products by one of the following available manufacturers offering products that may be incorporated into the Work include, but are not limited to, the following:
1. Eaton Electrical Inc.; Cutler-Hammer Business Unit.
2. General Electric Company; GE Consumer & Industrial - Electrical Distribution.
3. Siemens Energy & Automation, Inc.
4. Square D; a brand of Schneider Electric.
5. Approved equal.

B. Panelboards: NEMA PB 1, lighting and appliance branch-circuit type.

C. Mains: Circuit breaker or lugs only as indicated on drawings.

D. Branch Overcurrent Protective Devices: Bolt-on circuit breakers, replaceable without disturbing adjacent units.

E. Doors: Concealed hinges; secured with flush latch with tumbler lock; keyed alike.

2.3 Disconnecting And Overcurrent Protective Devices

A. Manufacturers: Subject to compliance with requirements, provide products by one of the following available manufacturers offering products that may be incorporated into the Work include, but are not limited to, the following:
   1. Eaton Electrical Inc.; Cutler-Hammer Business Unit.
   2. General Electric Company; GE Consumer & Industrial - Electrical Distribution.
   3. Siemens Energy & Automation, Inc.
   4. Square D; a brand of Schneider Electric.
   5. Approved equal.

B. Molded-Case Circuit Breaker (MCCB): Comply with UL 489, with interrupting capacity to meet available fault currents.
   1. Thermal-Magnetic Circuit Breakers Less Than 250 amps: Inverse time-current element for low-level overloads, and instantaneous magnetic trip element for short circuits.
   2. Electronic trip circuit breakers 250 amps and larger with rms sensing; field-replaceable rating plug or field-replicable electronic trip; and the following field-adjustable settings:
      a. Instantaneous trip.
      b. Long- and short-time pickup levels.
      c. Long- and short-time time adjustments.
      d. Ground-fault pickup level, time delay, and I^2t response.
   3. GFCI Circuit Breakers: Single- and two-pole configurations with Class A ground-fault protection (6-mA trip).
   4. Ground-Fault Equipment Protection (GFEP) Circuit Breakers: Class B ground-fault protection (30-mA trip).
   5. Arc-Fault Circuit Interrupter (AFCI) Circuit Breakers: Comply with UL 1699; 120/240-V, single-pole configuration.
   6. Molded-Case Circuit-Breaker (MCCB) Features and Accessories:
      a. Standard frame sizes, trip ratings, and number of poles.
      b. Lugs: Mechanical style, suitable for number, size, trip ratings, and conductor materials.
      c. Application Listing: Appropriate for application; Type SWD for switching fluorescent lighting loads; Type HID for feeding fluorescent and high-intensity discharge (HID) lighting circuits.

2.4 Panelboard Suppressors

A. Manufacturers: Subject to compliance with requirements, provide products by one of the following available manufacturers offering products that may be incorporated into the Work include, but are not limited to, the following:
   1. Current Technology; a subsidiary of Danahar Corporation.
   2. Eaton Electrical Inc.; Cutler-Hammer Business Unit.
   3. General Electric Company; GE Consumer & Industrial - Electrical Distribution.
   4. Liebert Corporation.
   5. Siemens Energy & Automation, Inc.
   6. Square D; a brand of Schneider Electric.
   7. Approved equal.

B. Surge Protection Device: IEEE C62.41-compliant, integrally mounted, solid-state, parallel-connected with sine-wave tracking suppression and filtering modules, UL 1449, second edition, short-circuit current rating matching or exceeding the panelboard short-circuit rating, and with the following features and accessories:
   1. Accessories:
      a. Fuses rated at 200-kA interrupting capacity.
      b. Fabrication using bolted compression lugs for internal wiring.
      c. Integral disconnect switch.
      d. Redundant suppression circuits.
      e. Redundant replaceable modules.
      f. Arrangement with wire connections to phase buses, neutral bus, and ground bus.
      g. LED indicator lights for power and protection status.
      h. Audible alarm, with silencing switch, to indicate when protection has failed.
      i. Form-C contacts rated at 5 A and 250-V ac, one normally open and one normally closed, for remote monitoring of system operation. Contacts shall reverse position on failure of any surge diversion module or on opening of any current-limiting device. Coordinate with building power monitoring and control system.
      j. Four-digit, transient-event counter set to totalize transient surges.
   2. Peak Single-Impulse Surge Current Rating:

T□□□	A□□□□□□□□□	Min Surge Current_Per Phase	Min Surge Current Per Mode (Note 1)
1	480/277 volt Service Entrance	300 kA	150 kA
2	480/277 volt Panelboards	200 kA	100 kA
3	208/120 volt Service Entrance	200 kA	100 kA

4	208/120 volt Panelboards	100 kA	50 kA

Note 1: L-G, L-N and N-G (WYE system);
L-L, L-G (Delta system)

3. Minimum single-impulse current ratings, using 8-by-20-mic.sec. waveform described in IEEE C62.41.2.
   a. Line to Neutral: 70,000 A.
   b. Line to Ground: 70,000 A.
   c. Neutral to Ground: 50,000 A.
4. Withstand Capabilities: 12,000 IEEE C62.41, Category C3 (10 kA), 8-by-20-mic.sec. surges with less than 5 percent change in clamping voltage.
5. Protection modes and UL 1449 SVR for grounded wye circuits with 208Y/120-V, three-phase, four-wire circuits shall be as follows:
   a. Line to Neutral: 400 V for 208Y/120
   b. Line to Ground: 400 V for 208Y/120
   c. Neutral to Ground: 400 V for 208Y/120

PART 3 - EXECUTION

3.1 Examination

A. Receive, inspect, handle, and store panelboards according to NECA 407 and NEMA PB 1.1.

B. Examine panelboards before installation. Reject panelboards that are damaged or rusted or have been subjected to water saturation.

C. Examine elements and surfaces to receive panelboards for compliance with installation tolerances and other conditions affecting performance of the Work.

D. Proceed with installation only after unsatisfactory conditions have been corrected.

3.2 Installation

A. Install panelboards and accessories according to NECA 407 and NEMA PB 1.1.

B. Temporary Lifting Provisions: Remove temporary lifting eyes, channels, and brackets and temporary blocking of moving parts from panelboards.

C. Mount panelboard cabinet plumb and rigid without distortion of box. Mount recessed panelboards with fronts uniformly flush with wall finish and mating with back box.

D. Install overcurrent protective devices and controllers not already factory installed.

1. Set field-adjustable, circuit-breaker trip ranges.

E. Install filler plates in unused spaces.

F. Comply with NECA 1.

3.3 Identification

A. Identify field-installed conductors, interconnecting wiring, and components; provide warning signs complying with Division 26 Section "Identification for Electrical Systems."

B. Create a directory to indicate installed circuit loads; incorporate Owner's final room designations. Obtain approval before installing. Use a computer or typewriter to create directory; handwritten directories are not acceptable.

C. Panelboard Nameplates: Label each panelboard with a nameplate complying with requirements for identification specified in Division 26 Section "Identification for Electrical Systems."

D. Device Nameplates: Label each branch circuit device in distribution panelboards with a nameplate complying with requirements for identification specified in Division 26 Section "Identification for Electrical Systems."

3.4 Field Quality Control

A. Testing Agency: Engage a qualified testing agency to perform tests and inspections.

B. Manufacturer's Field Service: Engage a factory-authorized service representative to inspect, test, and adjust components, assemblies, and equipment installations, including connections.

C. Perform tests and inspections.
1. Manufacturer's Field Service: Engage a factory-authorized service representative to inspect components, assemblies, and equipment installations, including connections, and to assist in testing.

D. Acceptance Testing Preparation:
1. Test insulation resistance for each panelboard bus, component, connecting supply, feeder, and control circuit.
2. Test continuity of each circuit.

E. Tests and Inspections:
1. Perform each visual and mechanical inspection and electrical test stated in NETA Acceptance Testing Specification. Certify compliance with test parameters.
2. Correct malfunctioning units on-site, where possible, and retest to demonstrate compliance; otherwise, replace with new units and retest.

F. Panelboards will be considered defective if they do not pass tests and inspections.

G. Prepare test and inspection reports, including a certified report that identifies panelboards included and that describes scanning results. Include notation of deficiencies detected, remedial action taken and observations after remedial action.

3.5 Adjusting

A. Adjust moving parts and operable component to function smoothly, and lubricate as recommended by manufacturer.

3.6 Protection

A. Temporary Heating: Apply temporary heat to maintain temperature according to manufacturer's written instructions.

END OF SECTION

SECTION 31 10 00 - SITE CLEARING

PART 1 - GENERAL

1.1 Summary

A. Section Includes:
1. Protecting existing vegetation to remain.
2. Removing existing vegetation.
3. Clearing and grubbing.

B. Related Sections:
1. Section 01 57 13"Temporary Erosion and Sediment Control" for temporary control systems including silt fence, hay bales, and construction entrance requirements.

1.2 Definitions

A. Subsoil: All soil beneath the topsoil layer of the soil profile, and typified by the lack of organic matter and soil organisms.

B. Surface Soil: Soil that is present at the top layer of the existing soil profile at the Project site. In undisturbed areas, the surface soil is typically topsoil; but in disturbed areas such as urban environments, the surface soil can be subsoil.

C. Topsoil: Top layer of the soil profile consisting of existing native surface topsoil or existing in-place surface soil and is the zone where plant roots grow. Its appearance is generally friable, pervious, and black or a darker shade of brown, gray, or red than underlying subsoil; reasonably free of subsoil, clay lumps, gravel, and other objects more than 2 inches in diameter; and free of subsoil and weeds, roots, toxic materials, or other nonsoil materials.

D. Tree-Protection Zone: Area surrounding individual trees or groups of trees to be protected during construction, and defined by a circle concentric with each tree with a radius 1.5 times the diameter of the drip line unless otherwise indicated.

E. Vegetation: Trees, shrubs, groundcovers, grass, and other plants.

1.3 Material Ownership

A. Except for stripped topsoil and other materials indicated to be stockpiled or otherwise remain Owner's property, cleared materials shall become Contractor's property and shall be removed from Project site.

1.4 Informational Submittals

A. Existing Conditions: Documentation of existing trees and plantings, adjoining construction, and site improvements that establishes preconstruction conditions that might be misconstrued as damage caused by site clearing.
   1. Use sufficiently detailed photographs or video.
   2. Include plans and notations to indicate specific wounds and damage conditions of each tree or other plants designated to remain.

B. Record Drawings: Identifying and accurately showing locations of capped utilities and other subsurface structural, electrical, and mechanical conditions.

1.5 Project Conditions

A. Traffic: Minimize interference with adjoining roads, streets, walks, and other adjacent occupied or used facilities during site-clearing operations.
   1. Do not close or obstruct streets, walks, or other adjacent occupied or used facilities without permission from Owner and authorities having jurisdiction.
   2. Provide alternate routes around closed or obstructed traffic ways if required by Owner or authorities having jurisdiction.

B. Salvable Improvements: Carefully remove items indicated to be salvaged and store on Owner's premises where indicated.

C. Remove and Reset Existing Site Improvements. Remove, store, and protect items required to be reset upon completion of proposed construction. Clean and restore items to existing condition or better prior to resetting.
   1. Restore items promptly during construction; do not leave until end of construction.

D. Utility Locator Service: Notify Call Before You Dig for area where Project is located before site clearing.

E. Do not commence site clearing operations until temporary erosion- and sedimentation-control and plant-protection measures are in place.

F. The following practices are prohibited within protection zones:
   1. Storage of construction materials, debris, or excavated material.
   2. Parking vehicles or equipment.
   3. Foot traffic.
   4. Erection of sheds or structures.
   5. Impoundment of water.
   6. Excavation or other digging unless otherwise indicated.
   7. Attachment of signs to or wrapping materials around trees or plants unless otherwise indicated.

G. Do not direct vehicle or equipment exhaust towards protection zones.

H. Prohibit heat sources, flames, ignition sources, and smoking within or near protection zones.

I. Soil Stripping, Handling, and Stockpiling: Perform only when the topsoil is dry or slightly moist.

PART 2 - PRODUCTS

No products used.

PART 3 - EXECUTION

3.1 Preparation

A. Protect and maintain benchmarks and survey control points from disturbance during construction.

B. Locate and clearly identify trees, shrubs, and other vegetation to remain. Wrap a 1-inch blue vinyl tie tape flag around each tree trunk at 54 inches above the ground.

C. Protect existing site improvements to remain from damage during construction.
   1. Restore damaged improvements to their original condition, as acceptable to Owner.

3.2 Tree And Plant Protection

A. Repair or replace trees, shrubs, and other vegetation indicated to remain or be relocated that are damaged by construction operations, in a manner approved by Engineer.

3.3 Existing Utilities

A. Interrupting Existing Utilities: Do not interrupt utilities serving facilities occupied by Owner or others unless permitted under the following conditions and then only after arranging to provide temporary utility services according to requirements indicated:
   1. Notify Owner not less than two days in advance of proposed utility interruptions.
   2. Do not proceed with utility interruptions without Owner's written permission.

3.4 Clearing And Grubbing

A. Remove obstructions, trees, shrubs, and other vegetation to permit installation of new construction. Minimize disturbance within clearing limits and perform only as much clearing as required to complete the Work.
   1. Do not remove trees, shrubs, and other vegetation indicated to remain or to be relocated.

2. Cut minor roots and branches of trees indicated to remain in a clean and careful manner where such roots and branches obstruct installation of new construction.
3. Grind down stumps and remove roots, obstructions, and debris to a depth of 18 inches below exposed subgrade.
4. Use only hand methods for grubbing within protection zones.
5. Chip removed tree branches and dispose of off-site.

B. Fill depressions caused by clearing and grubbing operations with satisfactory soil material unless further excavation or earthwork is indicated.
1. Place fill material in horizontal layers not exceeding a loose depth of 8 inches, and compact each layer to a density equal to adjacent original ground.

3.5 Topsoil Stripping

A. Remove sod and grass before stripping topsoil.

B. Strip topsoil to whatever depths are encountered in a manner to prevent intermingling with underlying subsoil or other waste materials.
1. Remove subsoil and nonsoil materials from topsoil, including clay lumps, gravel, and other objects more than 2 inches in diameter; trash, debris, weeds, roots, and other waste materials.

C. Stockpile topsoil away from edge of excavations without intermixing with subsoil. Grade and shape stockpiles to drain surface water. Cover to prevent windblown dust and erosion by water.
1. Do not stockpile topsoil within protection zones.
2. Stockpile surplus topsoil to allow for respreading deeper topsoil.

3.6 Site Improvements

A. Remove existing above- and below-grade improvements as indicated and necessary to facilitate new construction.

B. Remove slabs, paving, curbs, gutters, and aggregate base as indicated.
1. Unless existing full-depth joints coincide with line of demolition, neatly saw-cut along line of existing pavement to remain before removing adjacent existing pavement. Saw-cut faces vertically.
a. Do not mix excavated pavement with other excavated materials.

3.7 Restoration

A. Repair or restore existing site improvements and vegetation to remain, which is damaged by construction operations, to existing condition or better as determined by the Engineer, at no additional cost to the Owner.

3.8 Disposal Of Surplus And Waste Materials

A. Remove surplus soil material, unsuitable topsoil, obstructions, demolished materials, and waste materials including trash and debris, and legally dispose of them off Owner's property.

END OF SECTION

THIS PAGE IS INTENTIONALL LE T LAN

OR DUPLE PRINTING PURPOSES

SECTION 16315 - OVERHEAD ELECTRICAL DISTRIBUTION

PART 1 - GENERAL

1.1 Related Documents

A. Drawings and general provisions of the Contract, including General and Supplementary Conditions and Division 1 Specification Sections, apply to this Section.

1.2 Summary

A. This Section includes secondary-voltage, overhead electrical power distribution and the following:
   1. Conductors, connectors, and splices.
   2. Wood poles and crossarms.
   3. Hardware and accessories.
   4. Surge arresters.

1.3 Definitions

A. ACSR: Aluminum conductor, steel reinforced.

B. BIL: Basic impulse level, stated in kilovolts.

C. HDPE: High-density polyethylene.

D. RUS: Department of Agriculture, Rural Utilities Service.

E. Sag: The distance measured vertically from a conductor to the straight line joining its two points of support, measured at the midpoint of the span, unless otherwise indicated.
   1. Final Sag: The sag of a conductor under specified conditions of loading and temperature applied after it has been subjected, for an appreciable period, to the loading prescribed for the loading district in which it is situated, or equivalent loading, and the loading removed. Final sag includes the effect of inelastic deformation (creep).
   2. Initial Unloaded Sag: The sag of a conductor before the application of an external load.

F. Secondary: Conductors and components for circuits operating at the utilization voltage of 600 V or less.

G. Service: Set of insulated conductors extending from a pole to the metering point or service entrance connection at the location of utilization of electricity.

1.4 Submittals

A. Product Data: For the following:
   1. Conductors.

2. Poles.
3. Crossarms.
4. Insulators.
5. Surge arresters.
6. Guy assemblies.

B. Material Inspection Reports: From a qualified independent inspection agency indicating compliance of wood poles and cross arms with requirements indicated. RUS quality mark "WQC" on each item is acceptable in place of inspection as evidence of compliance.

C. Listing Documentation: Indicate products comply with RUS listing requirements specified in "Quality Assurance" Article.

D. Field quality-control test reports.

E. Source Quality-Control Test Reports: Factory inspection reports of wood poles.

1.5 Quality Assurance

A. Inspection Agency Qualifications for Pole and Crossarm Inspection: An independent agency, acceptable to authorities having jurisdiction, qualified to conduct inspections indicated.

B. Treatment Technician Qualifications for Field Treatment of Wood Poles and Crossarms: Certified by authorities having jurisdiction over environmental protection at the location of Project for field application of chemicals required.

C. Electrical Components Normally Covered by Listing and Labeling Services: Listed and labeled as defined in NFPA 70, Article 100, by a testing agency acceptable to authorities having jurisdiction, and marked for intended use.

D. Overhead-Line Components, Devices, and Accessories: Currently listed in RUS Informational Publication 202-1 without restriction for the intended application.

E. Comply with IEEE C2, except where stricter requirements are indicated or where local requirements that are stricter apply.

F. Strength of Line and Line Components Selected by Contractor: Provide grades of construction and strength required by IEEE C2 for conditions encountered at Project site for medium line loading, unless otherwise indicated.

1.6 Delivery, Storage, And Handling

A. Wood Pole Storage and Handling: Comply with ANSI O5.1. Do not use pointed handling tools capable of producing indentations greater than 1 inch.

1.7 Project Conditions

A. Existing Utilities: Do not interrupt utilities serving facilities occupied by Owner or others unless permitted under the following conditions and then only after arranging to provide temporary utility services according to requirements indicated:
   1. Notify Owner not less than two days in advance of proposed utility interruptions.
   2. Do not proceed with utility interruptions without Owner's written permission.

PART 2 - PRODUCTS

2.1 Manufacturers

A. In other Part 2 articles where titles below introduce lists, the following requirements apply to product selection:
   1. Available Manufacturers: Subject to compliance with requirements, manufacturers offering products that may be incorporated into the Work include, but are not limited to, manufacturers specified.
   2. Manufacturers: Subject to compliance with requirements, provide products by one of the manufacturers specified.

2.2 Conductors, Connectors, And Splices

A. Acceptable Manufacturers - Conductors:
   1. AFC Cable Systems.
   2. Alcan Cable Co.
   3. BICC Cables Company.
   4. Brugg Telecom Inc.
   5. Florida Wire & Cable, Inc.
   6. General Wire & Cable Co.
   7. Hendrix Wire and Cable Inc.
   8. Kerite Company (The); Innovation Systems Inc.
   9. King Wire Inc.
   10. Nokia Cables USA Inc.
   11. Northern Lights Cable, Inc.
   12. Okonite Company (The).
   13. Rome Cable Corp.
   14. Southwire Company.
   15. Approved Equal

B. Acceptable Manufacturers - Connectors and Splices:
   1. AB Chance Co.; Hubbell, Inc.
   2. Connector Manufacturing Co.
   3. Cooper Power Systems.
   4. Hubbell, Inc.; Anderson Electrical Products, Inc.
   5. Hubbell, Inc.; Fargo Manufacturing Company.

6. Approved Equal

C. Secondary-Voltage Line Conductors: Covered hard-drawn copper, complying with ICEA S-70-547, with HDPE covering

D. Connectors, Splices, and Conductor Securing and Protecting Components: Items include wire clamps, ties, conductor armor, fittings, connectors, and terminals. Listed for the specific applications and conductor types and combinations of materials used. Descriptions as follows for various applications:
   1. Copper to Copper: Copper alloy, complying with UL 486A.
   2. Aluminum Composition to Aluminum Composition: Aluminum alloy, complying with UL 486B.
   3. Copper to Aluminum Composition: Type suitable for this purpose, complying with UL 486B.
   4. Connectors and Splices for Secondary Conductors: Listed and labeled for the conditions and materials involved in each application.
   5. Splices under Tension: Compression type with strength exceeding the conductors spliced.
   6. Splices and Terminations for Covered Conductors: As recommended by conductor manufacturer for conductor and covering combination and for specific materials and physical arrangement of each splice.

2.3 Wood Poles

A. Approved Manufacturers:
   1. Bell Lumber & Pole Co.
   2. B. J. Carney & Co., Ltd.
   3. Brown Wood Preserving Co.
   4. GRA Services International, Inc.
   5. J. H. Baxter & Co.
   6. Koppers Industries, Inc.
   7. McFarland Cascade.
   8. Okonite Company (The).
   9. Taylor Lumber & Treating.
   10. Western Red Cedar Lumber Association.
   11. Approved Equal

B. Description: Wood poles comply with ANSI O5.1 and treated according to AWPA C4 with oil-borne preservatives and petroleum complying with AWPA P8 and AWPA P9.

C. Pole Marking Location: 10 feet from the pole butt for poles 50 feet long or less.

D. Factory Operations: Machine trim poles by turning smooth, full length. Roof, gain, and bore poles before pressure treatment.

2.4 Cross arms

A. Description: Solid-wood distribution type, complying with RUS REA Bulletin 1728H-701 for specified construction grade and IEEE C2 for required climbing space and wire clearances.

B. Braces: Galvanized, flat, ferrous-metal units; 1/4 inch thick by 1-/4 inches wide, minimum, with length to suit crossarm dimensions.

2.5 Hardware And Accessories

A. Description: Ferrous-metal items include, but are not limited to, bolts, nuts, washers, cross arm gains and braces, insulator pins, anchor rods, anchors, eyebolts, staples, and transformer brackets.
   1. Comply with ANSI C135.1, ANSI C135.2, ANSI C135.4, ANSI C135.14, ANSI C135.22, ANSI C135.33, and RUS Informational Publication 202-1 listings with the exception that base material shall be malleable iron or ductile iron, and finish shall be hot-dip galvanized.

B. Guy Strand Assemblies: Cable and attachments. Include strain insulators where indicated and if required by IEEE C2. Assemblies shall have uniform minimum breaking strength for components of each assembly.
   1. Cable: Seven strand. Zinc-coated steel, complying with ASTM A 475
   2. Cable Termination: Thimble eye.

C. Anchor and Anchor-Rod Assemblies: Hot-dip galvanized steel.
   1. Anchors: Expanding or power-installed screw type.
   2. Anchor Rods for Power-Installed Screw Anchors: ASTM A 53/A 53M, Schedule 80 pipe, with coupling, and [**twin**] [**triple**] thimble eye.

D. Guy Markers: Round vinyl or PVC material, yellow color, 96 inches long. Shatter resistant at temperatures below 0 deg F.

E. Grounding Materials: Comply with NEC using materials listed by RUS for the intended purpose without restriction.
   1. Conductors: No. 4 AWG, minimum; bare, solid, annealed copper, complying with ASTM B 8, unless otherwise indicated.
   2. Ground Conductor Protectors: PVC or half-round wood molding, fir, pressure treated according to AWPA C25.

PART 3 - EXECUTION

3.1 General Installation Requirements

A. Verify dimensions by field measurement, and identify locations of poles, guy anchors, and other features. Also identify locations of connection to new and existing supply lines and to secondary services. Notify Engineer of discrepancies and field conditions that are not indicated and that will affect installation.

B. Ground equipment according to NEC.

C. Apply warning signs and equipment labels according to Division 26 Section "Electrical Identification."

3.2 Conductor Installation, General

A. Handle and string conductors to prevent cuts, gouges, scratches, kinks, flattening, or deformation. Remove damaged sections and splice conductors.
   1. String new conductors to "initial" sag table values recommended by manufacturer for type and size of conductor.

B. Connections, Splices, and Terminations: Use kits listed for the specific type of connection and combination of materials used in the connection, or recommended for the specific use by manufacturer of material on which applied.
   1. Splice Location: Do not install within 10 feet of a support.
   2. Line Conductors: Install so strength exceeds ultimate rated strength of conductor.
   3. Splices and Terminations of Covered Conductors: Comply with manufacturer's written instructions.

3.3 Pole and Crossarm Installation

A. Pole Orientation: Align curve of curved wood poles with straight-line runs of three or more poles. Align gained surfaces perpendicular to runs.

B. Elevation of Line above Grade: Install poles with top at same elevation, unless grade changes dictate elevation change in poles, and according to the following:
   1. On level ground, set poles so tops of consecutive poles vary not more than 60 inches in elevation.
   2. Shorten wood poles by cutting off the top and make cuts to shed water. Apply preservative to cuts.

C. Set poles according to the following:
   1. Make pole holes vertical, uniform in diameter, and large enough to permit effective use of tamping bars all around. Bore or excavate holes with an average diameter at grade less than twice the diameter of the pole at the same grade.
   2. Use minimum depths indicated, except at locations where hole is partly or entirely in rock and if hole is not vertical or has a diameter at grade larger than two times the pole diameter at the same level; in these conditions, increase the depth of the hole by the following increments before setting the pole:
      a. Poles up to 35 Feet Long: 24 inches.
      b. Poles 36 to 60 Feet Long: 30 inches.
      c. Poles 61 to 75 Feet Long: 36 inches.
   3. For poles on slopes, indicated hole depth is from finished grade at lowest side of hole.
   4. Set poles in alignment and plumb except at dead ends, angles, and points of extra strain; rake poles against conductor strain 1 inch minimum, 2 inches maximum, (after conductors are

installed at required tension) for each 10 feet of pole length. Rake poles so they will not lean or bend in direction of strain when loaded.

5. Backfill holes in 6-inch maximum lifts, and thoroughly tamp each layer before starting the next.
6. Place surplus earth around pole in a conical shape, and tamp thoroughly to provide drainage away from pole.
7. Set poles so alternate crossarm gains face in alternate directions, except at terminals and dead ends; place gains on last two poles on side facing terminal or dead end.

D. Field treat factory-treated poles and crossarms as follows:
1. Poles Treated More Than One Year before Installation: Treat portion from 24 inches above ground line to butt.
2. Field-Bored Holes and Field-Cut Gains and Pole Tops: Treat cut portions.
3. Unused Holes: Treat and plug with treated-wood-dowel drive pins.
4. Engage the services of a technician certified according to Part 1 of this Section to apply treatment. Comply with requirements in AWPA standards that govern original factory treatment for field-applied treatment chemicals and application.

E. Crossarm Installation: Set line crossarms at right angle to line for straight runs and for angles 45 degrees and more. Bisect angles less than 45 degrees.
1. Buck Arms: Install at corners and junction poles, unless otherwise indicated.
2. Double Crossarms: Install at dead ends, corners, angles, and line crossings.
3. Equipment Arms: Locate below lines and set parallel or at right angles to them, whichever provides best climbing space.
4. Gains: Install factory-cut or metal pole gains only. Do not cut gains in field without specific written approval.

3.4 Hardware and Accessories Installation

A. Install washers against wood and under nuts, including eyenuts and locknuts.

B. Install nuts and locknuts wrench-tight on threaded connections.

C. Install guys to resist unbalanced loads, including those developed at angles, corners, and dead ends. Install two or more guys if a single guy will not provide adequate strength. Install separate guys if unbalanced loads are separated by 36 inches or more.

D. Protect guy strands from damage. Replace damaged guy strands. Install guy insulators where required to comply with IEEE C2 clearance requirements and elsewhere, where indicated.

E. Select guy anchors having adequate strength and holding area to suit anchor load and soil conditions at location of that anchor.
1. Soil Anchors: Align anchors in soil with guy. Set with anchor rod pointing at guy attachment on pole and rod projecting 6 to 9 inches from ground.

F. Guy Markers: Install at anchor end of guys. Clamp to guy strand or anchor at top and bottom of marker.

3.5 Field Quality Control

A. Manufacturer's Field Service: Engage a factory-authorized service representative to inspect field-assembled components and equipment installation, including connections. Report results in writing.

B. Testing Agency: Perform the following tests and inspections and prepare test reports:
   1. Furnish instruments and equipment required for tests that comply with NETA ATS.
   2. Ground Resistance: Measure resistance of each separate grounding electrode, including pole grounds. Also measure resistance of separate grounding electrode systems before bonding together.
      a. Perform tests and obtain acceptable results before energizing any portion of overhead electrical distribution system.
      b. Results and Follow-up: If ground resistance for a single ground electrode or pole ground, tested individually, exceeds 25 ohms, add a ground electrode not less than 10 feet away and interconnect with No. 2 AWG minimum bare conductor buried at least 12 inches below furnished grade.
   3. Aerial Conductor Sag and Tension: Observe procedures used by Contractor to verify that initial stringing sags and tensions comply with IEEE C2 and conductor manufacturer's Product Data and written recommendations.

END OF SECTION

EXHIBIT D

PROJECT SCHEDULE

[To be entered into the final agreement by MIRA based upon the Proposer's Project Schedule (Section 13 of the Proposal Form – Section 4.1 of the RFP Package Documents) as such schedule may be negotiated between MIRA and the Proposer.]

COMPENSATION SCHEDULE

The Compensation Schedule will be added to the Final Agreement by MIRA based upon the Successful Proposer's "Proposal Price Form" (Proposal Form 2) that was submitted to MIRA by the Proposer with its Proposal as such Form may be modified based on negotiations between MIRA and Proposer over prices.

PERFORMANCE BOND

Any singular reference to Contractor, Surety, Owner or other party shall be considered plural where applicable. The below addresses are to be used for giving required notice.

CONTRACTOR (Name and Address):	**SURETY** (Name and Principal Place of Business):

OWNER (Name and Address):

Materials Innovation and Recycling Authority
100 Constitution Plaza, 6th Floor
Hartford, CT 06103-1722

AGREEMENT

DATE:	
AGREEMENT NUMBER:	
AMOUNT:	$
PROJECT DESCRIPTION (Including Name and Location):	MEDIUM VOLTAGE INTERCONNECTION FROM MIRA PV TO HARTFORD DPW Materials Innovation and Recycling Authority 100 Constitution Plaza, 6th Floor Hartford, Connecticut 06103

BOND

BOND NUMBER:	
DATE: (Not earlier than Agreement Date)	
AMOUNT:	DOLLARS ($)

IN WITNESS WHEREOF, Surety and Contractor, intending to be legally bound hereby, subject to the terms printed on Pages 2 and 3 hereof, do each cause this Performance Bond to be duly executed on its behalf by its authorized officer, agent, or representative.

CONTRACTOR AS PRINCIPAL		**SURETY**	
	(SEAL)		(SEAL)
Contractor's Name and Corporate Seal		Surety s Name and Corporate Seal	
SIGNATURE:		**SIGNATURE:**	
NAME AND TITLE:		**NAME AND TITLE:**	

TERMS AND CONDITIONS TO PERFORMANCE BOND

1. The Contractor and the Surety jointly and severally bind themselves, their heirs, executors, administrators, successors and assigns to the Owner for the performance of the foregoing Agreement, the terms of which are incorporated herein by reference. Any singular reference to the Contractor, the Surety, the Owner or any other party herein shall be considered plural where applicable.

2. If the Contractor performs the Agreement, the Surety and the Contractor shall have no obligation under this Bond, except to participate in conferences as provided in Subparagraph 3.1.

3. If there is no Owner Default (as hereinafter defined), the Surety's obligation under this Bond shall arise after:

   3.1 The Owner has notified the Contractor and the Surety at its address described in Paragraph 10 below, that the Owner is considering declaring a Contractor Default (as hereinafter defined) and has requested and attempted to arrange a conference with the Contractor and the Surety to be held not later than fifteen (15) days after the receipt of such notice to discuss methods of performing the Agreement. If the Owner, the Contractor and the Surety agree, the Contractor shall be allowed a reasonable time to perform the Agreement, but such an agreement shall not waive the Owner's right, if any, to subsequently declare a Contractor Default; and

   3.2 The Owner has declared a Contractor Default (as hereinafter defined) and formally terminated the Contractor's right to complete the Agreement. Such Contractor Default shall not be declared earlier than twenty (20) days after the Contractor and the Surety have received notice as provided in Subparagraph 3.1.

   3.3 The Owner has agreed to pay the Balance of the Agreement Price to the Surety in accordance with the terms of the Agreement or to a contractor selected to perform the Agreement in accordance with the terms of the agreement with the Owner.

4. When the Owner has satisfied the conditions of Paragraph 3, the Surety shall promptly and at the Surety's expense take one of the following actions:

   4.1 Arrange for the Contractor, with the consent of the Owner, to perform and complete the Agreement; or

   4.2 Undertake to perform and complete the Agreement itself, through its agents or through independent contractors; or

   4.3 Obtain bids or negotiated proposals from qualified contractors acceptable to the Owner for a contract for performance and completion of the Agreement, arrange for a contract to be prepared for execution by the Owner and the contractor selected with the Owner's concurrence, to be secured with a performance bond executed by a qualified surety equivalent to the bond issued on the Agreement, and pay to the Owner the amount of damages described in Paragraph 6; or

   4.4 Waive its right to perform and complete, arrange for completion or obtain a new contractor and with reasonable promptness under the circumstances:

      4.4.1 After investigation, determine the amount for which it may be liable to the Owner and, as soon as practicable after the amount is determined, tender payment therefor to the Owner; or

      4.4.2 Deny liability in whole or in part and notify the Owner citing reasons therefor.

5. If the Surety does not proceed as provided in Paragraph 4 with reasonable promptness, the Surety shall be deemed to be in default on this Bond fifteen (15) days after receipt of an additional written notice from the Owner to the Surety demanding that the Surety perform its obligations under this Bond, and the Owner shall be entitled to enforce any remedy available to the Owner. If the Surety proceeds as provided in Subparagraph 4.4 and the Owner refuses the payment tendered or the Surety has denied liability, in whole or in part, without further notice the Owner shall be entitled to enforce any remedy available to the Owner.

6. After the Owner has terminated the Contractor's right to complete the Agreement, and if the Surety elects to act under Subparagraph 4.1, 4.2 or 4.3 above, then the responsibilities of the Surety to the Owner shall not be greater than those of the Contractor under the Agreement, and the responsibilities of the Owner to the Surety shall not be greater than those of the Owner under the Agreement. To the limit of the amount of this Bond, the Surety is obligated without duplication for:

   6.1 The responsibilities of the Contractor for correction of defective work and completion of the Agreement;

   6.2 Additional legal and delay costs resulting from the Contractor's Default and resulting from the actions or failure to act of the Surety under Paragraph 4; and

   6.3 Liquidated damages, or if no liquidated damages are specified in the Agreement, actual damages caused by delayed performance or non-performance of the Contractor.

7. The Surety shall not be liable to the Owner or others for obligations of the Contractor that are unrelated to the Agreement. No right of action shall accrue on this Bond to any person or entity other than the Owner or its successors and assigns.

8. The Surety hereby waives notice of any change, including changes of time, to the Agreement or to related subcontracts, purchase orders and other obligations.

9. Any proceeding, legal or equitable, under this Bond may be instituted in any court of competent jurisdiction in the location in which the work or part of the work is located

and shall be instituted within two (2) years after Contractor Default or within two (2) years after the Contractor ceased working or within two (2) years after the Surety refuses or fails to perform its obligations under this Bond, whichever occurs first. If the provisions of this Paragraph are void or prohibited by law, the minimum period of limitation available to sureties as a defense in the jurisdiction of the suit shall be applicable.

10. Notice to the Surety, the Owner or the Contractor shall be mailed or delivered to the address shown on the signature page of this Bond.

11. When this Bond has been furnished to comply with a statutory or other legal requirement in the location where the Agreement was to be performed, any provision in this Bond conflicting with said statutory or legal requirement shall be deemed deleted here from and provisions confirming to such statutory or other legal requirement shall be deemed incorporated herein. The intent is that this Bond shall be construed as a statutory bond and not as a common law bond.

12. Definitions.

    12.1 Balance of the Agreement Price: The total amount payable by the Owner to the Contractor under the Agreement after all proper adjustments have been made, including allowance to the Contactor of any amounts received or to be received by the Owner in settlement of insurance or other claims for damages to which the Contractor is entitled, reduced by all valid and proper payments made to or on behalf of the Contractor under the Agreement.

    12.2 Agreement: The agreement between the Owner and the Contractor identified on the signature page, including all Agreement Documents and changes thereto.

    12.3 Contractor Default: Failure of the Contractor, which has neither been remedied nor waived, to perform or otherwise to comply with any of the terms of the Agreement, including any failure of the Contractor to perform its warranty obligations.

    12.4 Owner Default: Failure of the Owner, which has neither been remedied nor waived, to perform or otherwise to comply with the terms of the Agreement or to perform and complete or comply with the other terms hereof.

13. Notwithstanding anything to the contrary, including any limitations that would otherwise apply under Paragraph 9 above, this bond shall apply to the Contractor's warranty obligations under Specification Section 01740.G for a period of five (5) years from the acceptance date.

LETTER OF CREDIT

To Be Issued By a Connecticut Bank Or By a National Banking Association

Irrevocable Standby Letter Of Credit No.	**[Letter Of Credit #]**		
Issuance Date:	**[Date]**	Expiration Date:	**[Date]**
Beneficiary:	Materials Innovation and Recycling Authority 100 Constitution Plaza, 6th Floor Hartford, CT 06103		

Gentlemen:

We hereby establish our Irrevocable Standby Letter Of Credit No. **[Letter Of Credit #]** in favor of the "Beneficiary," Materials Innovation and Recycling Authority ("MIRA"), at the request and for the account of **[Name of Contractor]**, for the sum or sums up to the aggregate amount of $_____(_____ Dollars) available for payment against your draft(s) at sight on us.

Drafts must be drawn and presented to us at this office not later than our close of business on **[Date]** or any duly extended expiration date, and each draft must bear the following clause: "Drawn Under Letter Of Credit No. **[Letter Of Credit #]**."

Drafts must be accompanied by a certified statement from the Beneficiary that **[name of Contractor]** has failed to satisfy or perform one or more of its obligations or breached one or more of its covenants or representations under a certain AGREEMENT FOR MEDIUM VOTAGE INTERCONNECTION FROM MIRA PV TO HARTFORD DPW between **[name of Contractor]** and MIRA, dated as of **[Date]**.

Partial drawings hereunder are permitted.

We hereby agree with you that drafts drawn under and in compliance with the above terms of this Letter Of Credit shall be duly and promptly honored on due presentation and delivery to us on or before the above-referenced expiration date or any duly extended expiration date.

The term "Beneficiary" includes any successor by operation of law of the named Beneficiary including, without limitation, any liquidator, rehabilitator, receiver or conservator.

Except as expressly stated herein, this undertaking is not subject to any agreement, condition or qualification. The obligation of **[name of the issuing Connecticut Bank or National Banking Association]** under this Letter of Credit is the individual obligation of **[name of the issuing Connecticut Bank or National Banking Association]** and is in no way contingent upon reimbursement with respect thereto.

It is a condition of this Letter Of Credit that it is deemed to be automatically extended without amendment for one (1) year from the expiration date stated above, or any future expiration date, unless not later than ninety (90) days prior to the expiration date stated above or the then current expiration date we notify you by registered mail that we elect not to renew this Letter Of Credit for any such additional period.

We hereby agree that all drafts drawn under and in compliance with the terms of this Letter Of Credit shall be duly honored by us at your first demand, notwithstanding any contestation or dispute between you and **[name of Contractor]**, if presented to us in accordance with the provisions hereof.

This Letter of Credit is subject to and governed by the laws of the State of Connecticut, the decisions of the courts of that state, and the Uniform Customs and Practice for Documentary Credits (1993 Revision) International Chamber of Commerce Publication No. 500 and in the event of any conflict, the laws of the State of Connecticut and the decisions of the courts of that state will control. If this Letter Of Credit expires during an interruption of business of this bank as described in Article 17 of said Publication 500, **[name of issuing Connecticut Bank or National Banking Association**] hereby specifically agrees to effect payment if this Letter of Credit is drawn against within thirty (30) days after the resumption of business from such interruption.

Very truly yours,

_____

Authorized Signature for
[name of issuing Connecticut Bank or National Banking Association]

CONSTRUCTION PAYMENT BOND

Any singular reference to Contractor, Surety, Owner or other party shall be considered plural where applicable. The below addresses are to be used for giving required notice.

CONTRACTOR (Name and Address):	**SURETY** (Name and Principal Place of Business):

OWNER (Name and Address):

Materials Innovation and Recycling Authority
100 Constitution Plaza, 6th Floor
Hartford, CT 06103-1722

AGREEMENT

DATE:	
AGREEMENT NUMBER:	
AMOUNT:	$
PROJECT DESCRIPTION (Including Name and Location):	MEDIUM VOLTAGE INTERCONNECTION FROM MIRA PV TO HARTFORD DPW Materials Innovation and Recycling Authority 100 Constitution Plaza, 6th Floor Hartford, Connecticut 06103

BOND

BOND NUMBER:	
DATE: (Not earlier than Agreement Date)	
AMOUNT:	DOLLARS ($)

IN WITNESS WHEREOF, Surety and Contractor, intending to be legally bound hereby, subject to the terms printed on Pages 2 and 3 hereof, do each cause this Payment Bond to be duly executed on its behalf by its authorized officer, agent, or representative.

CONTRACTOR AS PRINCIPAL		**SURETY**	
	(SEAL)		(SEAL)
Contractor's Name and Corporate Seal		Surety s Name and Corporate Seal	
SIGNATURE:		**SIGNATURE:**	
NAME AND TITLE:		**NAME AND TITLE:**	

TERMS AND CONDITIONS TO CONSTRUCTION PAYMENT BOND

1. The Contractor and the Surety, jointly and severally, bind themselves, their heirs, executors, administrators, successors and assigns to the Owner to pay for labor, materials and equipment furnished for use in the performance of the Agreement, which is incorporated herein by reference.

2. With respect to the Owner, this obligation shall be null and void if the Contractor:

   2.1 Promptly makes payment, directly or indirectly, for all sums due Claimants, and

   2.2 Defends, indemnifies and holds harmless the Owner from claims, demands, liens or suits by any person or entity whose claim, demand, lien or suit is for the payment for labor, materials or equipment furnished for use in the performance of the Agreement, provided the Owner has promptly notified the Contractor and the Surety (at the address described in Paragraph 12) of any claims, demands, liens or suits and tendered defense of such claims, demands, liens or suits to the Contractor and the Surety, and provided there is no Owner Default.

3. With respect to Claimants, this obligation shall be null and void if the Contractor promptly makes payment, directly or indirectly, for all sums due.

4. The Surety shall have no obligation to Claimants under this Bond until:

   4.1 Claimants who are employed by or have a direct contract with the Contractor have given notice to the Surety (at the address described in Paragraph 12) and sent a copy, or notice thereof, to the Owner, stating that a claim is being made under this Bond and, with substantial accuracy, the amount of the claim.

   4.2 Claimants who do not have a direct contract with the Contractor:

      4.2.1 Have furnished written notice to the Contractor and sent a copy, or notice thereof to the Owner, within 90 days after having last performed labor or last furnished materials or equipment included in the claim stating, with substantial accuracy, the amount of the claim and the name of the party to whom the materials were furnished or supplied or for whom the labor was done or performed; and

      4.2.2 Have either received a rejection in whole or in part from the Contractor, or not received within 30 days of furnishing the above notice any communication from the Contractor by which the Contractor has indicated the claim will be paid directly or indirectly; and

      4.2.3 Not having been paid within the above 30 days, have sent a written notice to the Surety (at the address described in Paragraph 12) and sent a copy, or notice thereof, to the Owner, stating that a claim is being made under this Bond and enclosing a copy of the previous written notice furnished to the Contractor.

5. If a notice required by Paragraph 4 is given by the Owner to the Contractor or to the Surety, that is sufficient compliance.

6. When the Claimant has satisfied the conditions of Paragraph 4, the Surety shall promptly and at the Surety's expense take the following actions:

   6.1 Send an answer to the Claimant, with a copy to the Owner, within 45 days after receipt of the claim, stating the amounts that are undisputed and the basis for challenging any amounts that are disputed.

   6.2 Pay or arrange for payment of any undisputed amounts.

7. The Surety's total obligation shall not exceed the amount of this Bond, and the amount of this Bond shall be credited for any payments made in good faith by the Surety.

8. Amounts owed by the Owner to the Contractor under the Agreement shall be used for the performance of the Agreement and to satisfy claims, if any, under any Performance Bond. By the Contractor furnishing and the Owner accepting this Bond, they agree that all funds earned by the Contractor in the performance of the Agreement are dedicated to satisfy obligations of the Contractor and the Surety under this Bond, subject to the Owner's priority to use the funds for the completion of the work.

9. The Surety shall not be liable to the Owner, Claimants or others for obligations of the Contractor that are unrelated to the Agreement. The Owner shall not be liable for payment of any costs or expenses of any Claimant under this Bond, and shall have under this Bond no obligations to make payments to, give notices on behalf of, or otherwise have obligations to Claimants under this Bond.

10. The Surety hereby waives notice of any change, including changes of time, to the Agreement or to related subcontracts, purchase orders and other obligations.

11. No suit or action shall be commenced by a Claimant under this Bond other than in a court of competent jurisdiction in the location in which the work or part of the work is located or after the expiration of one year from the date (1) on which the Claimant gave the notice required by Subparagraph 4.1 or Clause 4.2.3, or (2) on which the last labor or service was performed by anyone or the last materials or equipment were furnished by anyone under the Agreement, whichever of (1) or (2) first occurs. If the provisions of this Paragraph are void or prohibited by law, the minimum period of limitation available to

sureties as a defense in the jurisdiction of the suit shall be applicable.

12. Notice to the Surety, the Owner or the Contractor shall be mailed or delivered to the address shown on the signature page. Actual receipt of notice by Surety, the Owner or the Contractor, however accomplished, shall be sufficient compliance as of the date received at the address shown on the signature page.

13. When this Bond has been furnished to comply with a statutory or other legal requirement in the location where the construction was to be performed, any provision in this Bond conflicting with said statutory or legal requirement shall be deemed deleted herefrom and provisions conforming to such statutory or other legal requirement shall be deemed incorporated herein. The intent is that this Bond shall be construed as a statutory bond and not as a common law bond.

14. Upon request by any person or entity appearing to be a potential beneficiary of this Bond, the Contractor shall promptly furnish a copy of this Bond or shall permit a copy to be made.

15. Definitions

    15.1 Claimant: An individual or entity having a direct contract with the Contractor or with a subcontractor of the Contractor to furnish labor, materials or equipment for use in the performance of the Agreement. The intent of this Bond shall be to include without limitation in the terms "labor, materials or equipment" that part of water, gas, power, light, heat, oil, gasoline, telephone service or rental equipment used in the Agreement, architectural and engineering services required for performance of the work of the Contractor and the Contractor's subcontractors, and all other items for which a mechanic's lien may be asserted in the jurisdiction where the labor, materials or equipment were furnished,

    15.2 Agreement: The agreement between the Owner and the Contractor identified on the signature page, including all Agreement Documents and changes thereto.

    15.3 Owner Default: Failure of the Owner, which has neither been remedied nor waived, to pay the Contractor as required by the Agreement or to perform and complete or comply with the other terms thereof.

SEEC FORM 11

NOTICE TO EXECUTIVE BRANCH STATE CONTRACTORS AND PROSPECTIVE STATE CONTRACTORS OF CAMPAIGN CONTRIBUTION AND SOLICITATION BAN

This notice is provided under the authority of Connecticut General Statutes 9-612(g)(2), as amended by P.A. 07-1, and is for the purpose of informing state contractors and prospective state contractors of the following law (italicized words are defined on the following page):

Campaign Contribution and Solicitation Ban

No *state contractor*, *prospective state contractor*, *principal of a state contractor or principal of a prospective state contractor*, with regard to a *state contract* or *state contract solicitation* with or from a state agency in the executive branch or a quasi-public agency or a holder, or principal of a holder of a valid prequalification certificate, shall make a contribution to, or *solicit* contributions on behalf of (i) an exploratory committee or candidate committee established by a candidate for nomination or election to the office of Governor, Lieutenant Governor, Attorney General, State Comptroller, Secretary of the State or State Treasurer, (ii) a political committee authorized to make contributions or expenditures to or for the benefit of such candidates, or (iii) a party committee;

In addition, no holder or principal of a holder of a valid prequalification certificate, shall make a contribution to, or solicit contributions on behalf of (i) an exploratory committee or candidate committee established by a candidate for nomination or election to the office of State senator or State representative, (ii) a political committee authorized to make contributions or expenditures to or for the benefit of such candidates, or (iii) a party committee.

Duty to Inform

State contractors and prospective state contractors are required to inform their principals of the above prohibitions, as applicable, and the possible penalties and other consequences of any violation thereof.

Penalties for Violations

Contributions or solicitations of contributions made in violation of the above prohibitions may result in the following civil and criminal penalties:

Civil penalties--$2000 or twice the amount of the prohibited contribution, whichever is greater, against a principal or a contractor. Any state contractor or prospective state contractor which fails to make reasonable efforts to comply with the provisions requiring notice to its principals of these prohibitions and the possible consequences of their violations may also be subject to civil penalties of $2000 or twice the amount of the prohibited contributions made by their principals.

Criminal penalties—Any knowing and willful violation of the prohibition is a Class D felony, which may subject the violator to imprisonment of not more than 5 years, or $5000 in fines, or both.

Contract Consequences

Contributions made or solicited in violation of the above prohibitions may result, in the case of a state contractor, in the contract being voided.

Contributions made or solicited in violation of the above prohibitions, in the case of a prospective state contractor, shall result in the contract described in the state contract solicitation not being awarded to the prospective state contractor, unless the State Elections Enforcement Commission determines that mitigating circumstances exist concerning such violation.

The State will not award any other state contract to anyone found in violation of the above prohibitions for a period of one year after the election for which such contribution is made or solicited, unless the State Elections Enforcement Commission determines that mitigating circumstances exist concerning such violation.

Additional information and the entire text of P.A 07-1 may be found on the website of the State Elections Enforcement Commission, www.ct.gov/seec. Click on the link to “State Contractor Contribution Ban.”

Definitions:

"State contractor" means a person, business entity or nonprofit organization that enters into a state contract. Such person, business entity or nonprofit organization shall be deemed to be a state contractor until December thirty-first of the year in which such contract terminates. "State contractor" does not include a municipality or any other political subdivision of the state, including any entities or associations duly created by the municipality or political subdivision exclusively amongst themselves to further any purpose authorized by statute or charter, or an employee in the executive or legislative branch of state government or a quasi-public agency, whether in the classified or unclassified service and full or part-time, and only in such person's capacity as a state or quasi-public agency employee.

"Prospective state contractor" means a person, business entity or nonprofit organization that (i) submits a response to a state contract solicitation by the state, a state agency or a quasi-public agency, or a proposal in response to a request for proposals by the state, a state agency or a quasi-public agency, until the contract has been entered into, or (ii) holds a valid prequalification certificate issued by the Commissioner of Administrative Services under section 4a-100. "Prospective state contractor" does not include a municipality or any other political subdivision of the state, including any entities or associations duly created by the municipality or political subdivision exclusively amongst themselves to further any purpose authorized by statute or charter, or an employee in the executive or legislative branch of state government or a quasi-public agency, whether in the classified or unclassified service and full or part-time, and only in such person's capacity as a state or quasi-public agency employee.

"Principal of a state contractor or prospective state contractor" means (i) any individual who is a member of the board of directors of, or has an ownership interest of five per cent or more in, a state contractor or prospective state contractor, which is a business entity, except for an individual who is a member of the board of directors of a nonprofit organization**,** (ii) an individual who is employed by a state contractor or prospective state contractor, which is a business entity, as president, treasurer or executive vice president, (iii) an individual who is the chief executive officer of a state contractor or prospective state contractor, which is not a business entity, or if a state contractor or prospective state contractor has no such officer, then the officer who duly possesses comparable powers and duties, (iv) an officer or an employee of any state contractor or prospective state contractor who has *managerial or discretionary responsibilities with respect to a state contract,* (v) the spouse or a *dependent child* who is eighteen years of age or older of an individual described in this subparagraph, or (vi) a political committee established or controlled by an individual described in this subparagraph or the business entity or nonprofit organization that is the state contractor or prospective state contractor.

"State contract" means an agreement or contract with the state or any state agency or any quasi-public agency, let through a procurement process or otherwise, having a value of fifty thousand dollars or more, or a combination or series of such agreements or contracts having a value of one hundred thousand dollars or more in a calendar year, for (i) the rendition of services, (ii) the furnishing of any goods, material, supplies, equipment or any items of any kind, (iii) the construction, alteration or repair of any public building or public work, (iv) the acquisition, sale or lease of any land or building, (v) a licensing arrangement, or (vi) a grant, loan or loan guarantee. "State contract" does not include any agreement or contract with the state, any state agency or any quasi-public agency that is exclusively federally funded, an education loan or a loan to an individual for other than commercial purposes.

"State contract solicitation" means a request by a state agency or quasi-public agency, in whatever form issued, including, but not limited to, an invitation to bid, request for proposals, request for information or request for quotes, inviting bids, quotes or other types of submittals, through a competitive procurement process or another process authorized by law waiving competitive procurement.

“Managerial or discretionary responsibilities with respect to a state contract” means having direct, extensive and substantive responsibilities with respect to the negotiation of the state contract and not peripheral, clerical or ministerial responsibilities.

“Dependent child” means a child residing in an individual’s household who may legally be claimed as a dependent on the federal income tax of such individual.

“Solicit” means (A) requesting that a contribution be made, (B) participating in any fund-raising activities for a candidate committee, exploratory committee, political committee or party committee, including, but not limited to, forwarding tickets to potential contributors, receiving contributions for transmission to any such committee or bundling contributions, (C) serving as chairperson, treasurer or deputy treasurer of any such committee, or (D) establishing a political committee for the sole purpose of soliciting or receiving contributions for any committee. Solicit does not include: (i) making a contribution that is otherwise permitted by Chapter 155 of the Connecticut General Statutes; (ii) informing any person of a position taken by a candidate for public office or a public official, (iii) notifying the person of any activities of, or contact information for, any candidate for public office; or (iv) serving as a member in any party committee or as an officer of such committee that is not otherwise prohibited in this section.

AFFIDAVIT CONCERNING NONDISCRIMINATION

[The successful Proposer's Affidavit Concerning Nondiscrimination (that was submitted with their proposal) will be added by MIRA.]

AFFIDAVIT CONCERNING CONSULTING FEES

Pursuant to Section 4a-81 of the Connecticut General Statutes, this Affidavit must be completed and properly executed under penalty of false statement by a chief official of the successful bidder/proposer/statement of qualifications submitter for an Agreement (the "Contractor"). Such chief official of the Contractor must be the person who is properly authorized to execute the Agreement on behalf of the Contractor. This Affidavit must be properly executed at the same time that the Contractor executes the Agreement. If the Contractor fails to execute this Affidavit, the Contractor shall be disqualified for the Agreement.

I, the undersigned, am over the age of eighteen and understand and appreciate the obligation of an oath. I am _____ (title) of _____ (firm name), an entity duly formed and existing under the laws of _____ (name of state or commonwealth) ("Contractor").

I certify that I am authorized to execute and deliver this affidavit on behalf of Contractor, as follows:

1. Contractor seeks to enter into the "Agreement For Medium Voltage Interconnection From MIRA PV To Hartford DPW" (the "Agreement") with the Materials Innovation and Recycling Authority ("MIRA");

2. Except as disclosed in Table 1 below and except for a consulting agreement that is with a consultant who is registered under the provisions of Chapter 10 of the Connecticut General Statutes[1] as of the date this Affidavit is submitted, Contractor has not entered into any consulting agreement[2] in connection with the Agreement whereby any duties of the consultant pursuant to said consulting agreement[2] require that consultant pursue communications concerning business of MIRA, whether or not direct contact with MIRA, a MIRA official, a MIRA employee, a state agency, a state or public official, or a state employee was expected or made;

3. Contractor shall amend this Affidavit whenever Contractor enters into any new consulting agreement[2] during the term of the Agreement; and

4. The statements set forth herein are true, to the best of my knowledge and belief, subject to the penalties of false statement.

[1] Pursuant to Section 1-94 of Chapter 10 the Connecticut General Statutes, a lobbyist as defined in the Chapter is required to register with the Office of State Ethics.

[2] Pursuant to Section 41-81 of the Connecticut General Statutes, for the purposes of this Affidavit, "consulting agreement" means "any written or oral agreement to retain the services, for a fee, of a consultant for the purposes of (A) providing counsel to a contractor, vendor, consultant or other entity seeking to conduct, or conducting, business with the state, (B) contacting, whether in writing or orally, any executive, judicial, or administrative office of the state, including any department, institution, bureau, board, commission, authority, official or employee for the purpose of solicitation, dispute resolution, introduction, requests for information, or (C) any other similar activity related to such contract. Consulting agreement does not include any agreements entered into with a consultant who is registered under the provisions of chapter 10 as of the date such affidavit is submitted in accordance with the provisions of this section.

TABLE 1: Disclosure of Consulting Agreements

(If Contractor has not entered into any consulting agreements[2] in connection with the Agreement, Contractor should enter "None" in the space provided for the "Name of Consultant.")

Name of Consultant:		
Name of Consultant's Firm:		
Description of the Basic Terms of the Consulting Agreement:		
Brief Description of the Services Provided:		
Is the Consultant a Former State Employee or Public Official?	☐ Yes	☐ No
If the answer to the question above concerning whether or not the consultant is a former state employee or public official is "Yes," the following information must be provided.		
Name of Former Agency:		
Date Employment Terminated:		

By (Signature): _____

Name (Print): _____

Title: _____

Sworn to before me this _____ day of _____ 20 ____

_____ _____

Notary Public/Commissioner of the Superior Court Commission Expiration Date

CONTRACTOR'S CERTIFICATION CONCERNING GIFTS

AGREEMENT FOR
MEDIUM VOLTAGE INTERCONNECTION FROM MIRA PV TO HARTFORD DPW

(This CERTIFICATION is to be signed by an authorized officer of the Contractor or the Contractor's managing general partner.)

Section 4-252 of the *Connecticut General Statutes* requires that a Contractor (i.e., the successful bidder/proposer/statement of qualifications submitter for an Agreement) complete and properly execute this Certification Concerning Gifts at the same time that the Contractor executes the Agreement. If the Contractor fails to make the required certifications, the Contractor shall be disqualified for the Agreement.

I, _____, a duly authorized officer and/or representative of _____ (firm name) (the "Contractor"), being duly sworn, hereby depose and say that:

1. I am over eighteen (18) years of age and believe in the obligations of an oath; and

2. The Contractor has submitted a bid for the "Agreement For Medium Voltage Interconnection From MIRA PV To Hartford DPW" (the "Agreement") to the Materials Innovation and Recycling Authority ("MIRA"), and has been selected by MIRA as the successful bidder for the Agreement and is prepared to enter into the Agreement with MIRA; and

3. No gifts were made between March 1, 2015 and the date of execution of the Agreement, by

   (a) The Contractor,

   (b) Any principals and key personnel of the Contractor who participated substantially in preparing the Contractor's bid/proposal/statement of qualifications for or the negotiation of the Agreement, or

   (c) Any agent of the Contractor or principals and key personnel who participated substantially in preparing the Contractor's bid/proposal/statement of qualifications for or the negotiation of the Agreement

   to

   (1) Any public official or employee of MIRA who participated substantially in the preparation of the bid/proposal/qualifications solicitation for or the negotiation or award of the Agreement (such MIRA employees are listed in Table 2 below), or

   (2) Any public official or state employee of any state agency who has supervisory or appointing authority over MIRA (such public officials and state employees are listed in Table 3 below); and

4. No such principals and key personnel of the Contractor or agent of the Contractor or principals and key personnel knows of any action by Contractor to circumvent the prohibition on gifts by providing for any other principals and key personnel, official, employee or agent of the Contractor to provide a gift to any such public official or state employee; and

5. The Contractor made the bid/proposal/statement of qualifications for the Agreement without fraud or collusion with any person;

6. The information set forth herein is true, to the best of my knowledge and belief, subject to the penalties of false statement.

TABLE 2: MIRA Substantial Participants in the Preparation of the Request for Bids for the Agreement

David Bodendorf, Senior Environmental Engineer
Peter Egan, Director of Operations and Environmental Affairs
Roger Guzowski, Contracts and Procurement Manager
Thomas Kirk, President

TABLE 3: Public Officials and State Employees of State Agencies Who Have Supervisory or Appointing Authority over MIRA

Governor Dannel P. Malloy
Senator Martin Looney, President Pro Tempore of the Senate
Senator John McKinney, Minority Leader of the Senate
Representative Brendan Sharkey, Speaker of the House of Representatives
Representative Themis Klarides, Minority Leader of the House of Representatives

Signature: _____

Name (type/print): _____

Title: _____

State Of: _____

County Of: _____

_____, being fully sworn, deposes and says that he/she is the _____ (Title) of _____ (Firm Name), the Contractor herein, that he/she has read the foregoing statement concerning gifts, and, under the penalty of perjury, certifies that each and every part of said statement is true to his/her best knowledge and belief.

Sworn to before me this _____ day of _____ 20 _____

_____ _____

Notary Public/Commissioner of the Superior Court Commission Expiration Date

For the purposes of this Certification Concerning Gifts, the following terms are defined as follows:

"Gift" means anything of value, which is directly and personally received, unless consideration of equal or greater value is given in return. "Gift" shall **not** include:

(1) A political contribution otherwise reported as required by law or a donation or payment as described in subdivision (9) or (10) of subsection (b) of section 9-601a of the *Connecticut General Statutes*;

(2) Services provided by persons volunteering their time, if provided to aid or promote the success or defeat of any political party, any candidate or candidates for public office or the position of convention delegate or town committee member or any referendum question;

(3) A commercially reasonable loan made on terms not more favorable than loans made in the ordinary course of business;

(4) A gift received from (A) an individual's spouse, fiance or fiancee, (B) the parent, brother or sister of such spouse or such individual, or (C) the child of such individual or the spouse of such child;

(5) Goods or services (A) which are provided to a state agency or quasi-public agency (i) for use on state or quasi-public agency property, or (ii) that support an event , and (B) which facilitate state or quasi-public agency action or functions. As used in this Affidavit Concerning Gifts, "state property" means (i) property owned by the state or a quasi-public agency, or (ii) property leased to a state agency or quasi-public agency;

(6) A certificate, plaque or other ceremonial award costing less than one hundred dollars;

(7) A rebate, discount or promotional item available to the general public;

(8) Printed or recorded informational material germane to state action or functions;

(9) Food or beverage or both, costing less than fifty dollars in the aggregate per recipient in a calendar year, and consumed on an occasion or occasions at which the person paying, directly or indirectly, for the food or beverage, or his representative, is in attendance;

(10) Food or beverage or both, costing less than fifty dollars per person and consumed at a publicly noticed legislative reception to which all members of the General Assembly are invited and which is hosted not more than once in any calendar year by a lobbyist or business organization. For the purposes of such limit, (A) a reception hosted by a lobbyist who is an individual shall be deemed to have also been hosted by the business organization which he owns or is employed by, and (B) a reception hosted by a business organization shall be deemed to have also been hosted by all owners and employees of the business organization who are lobbyists. In making the calculation for the purposes of such fifty-dollar limit, the donor shall divide the amount spent on food and beverage by the number of persons whom the donor reasonably expects to attend the reception;

(11) Food or beverage or both, costing less than fifty dollars per person and consumed at a publicly noticed reception to which all members of the General Assembly from a region of the state are invited and which is hosted not more than once in any calendar year by a lobbyist or business organization. For the purposes of such limit, (A) a reception hosted by a lobbyist who is an individual shall be deemed to have also been hosted by the business organization which he owns or is employed by, and (B) a reception hosted by a business organization shall be deemed to have also been hosted by all owners and employees of the business organization who are lobbyists. In making the calculation for the purposes of such fifty-dollar limit, the donor shall divide the amount spent on food and beverage by the number of persons whom the donor reasonably expects to attend the reception. As used in this subdivision, "region of the state" means the established geographic service area of the organization hosting the reception;

(12) Gifts costing less than one hundred dollars in the aggregate or food or beverage provided at a hospitality suite at a meeting or conference of an interstate legislative association, by a person who is not a registrant or is not doing business with the state of Connecticut;

(13) Admission to a charitable or civic event, including food and beverage provided at such event, but excluding lodging or travel expenses, at which a public official or state employee participates in his official capacity, provided such admission is provided by the primary sponsoring entity;

(14) Anything of value provided by an employer of (A) a public official, (B) a state employee, or (C) a spouse of a public official or state employee, to such official, employee or spouse, provided such benefits are customarily and ordinarily provided to others in similar circumstances; or

(15) Anything having a value of not more than ten dollars, provided the aggregate value of all things provided by a donor to a recipient under this subdivision in any calendar year shall not exceed fifty dollars.

(16) Training that is provided by a vendor for a product purchased by a state or quasi-public agency which is offered to all customers of such vendor; or

(17) Travel expenses, lodging, food, beverage and other benefits customarily provided by a prospective employer, when provided to a student at a public institution of higher education whose employment is derived from such student's status as a student at such institution, in connection with bona fide employment discussions.

"Participated substantially" means participation that is direct, extensive and substantive, and not peripheral, clerical or ministerial.

"Principals and key personnel" means officers, directors, shareholders, members, partners and managerial employees.

PRESIDENT'S CERTIFICATION CONCERNING GIFTS

AGREEMENT FOR
MEDIUM VOLTAGE INTERCONNECTION FROM MIRA PV TO HARTFORD DPW

Awarded To

[NAME OF CONTRACTOR/CONSULTANT]

(This CERTIFICATION is to be signed by the President of MIRA
at the time the Agreement is executed by him/her.)

By submission of this Certification, the President of the Materials Innovation and Recycling Authority ("MIRA") hereby certifies that the selection of the most qualified or highest ranked person, firm or corporation for the "Agreement For Medium Voltage Interconnection From MIRA PV To Hartford DPW" was not the result of collusion, the giving of a gift or the promise of a gift, compensation, fraud or inappropriate influence from any person.

Signature: _____

Name: **Thomas D. Kirk**

Title: **President**

State Of: **Connecticut**

County Of: **Hartford**

Thomas D. Kirk, being fully sworn, deposes and says that he is the President of the Materials Innovation and Recycling Authority, that he has read the forgoing statement concerning collusion, the giving of gifts or the promise of gifts, compensation, fraud or inappropriate influence and, under the penalty of perjury, certifies that each and every part of said statement is true.

Sworn to before me this _____ day of _____ 20 ___

_____
Notary Public/Commissioner of the Superior Court